RECEIVED
MAY 10 2021
Division of Air Quality

PAINT ARRESTANCE FILTER TEST REPORT

Spray Removal Efficiency & Paint Holding Capacity

BASED ON 40 CFR PART 63 NATIONAL EMISSION STANDARD

Tested for:	**Garmat U.S.A.**
Filter Mfr.:	**Garmat U.S.A.**
Filter Name/Model:	**Sample**
Report#./Test#	**R 804GA T904**
Report Date:	**March 28, 2019**

Test Information

FILTER DESCRIPTION (20" x 20" pad):
White on white Highloft poly pad

PAINT DESCRIPTION:
High Solids Baking Enamel (S.W. #1 Permaclad 2400, red)

PAINT SPRAY METHOD:
Conventional Air Gun at 40 PSI

SPRAY FEED RATE:
143 gr./min. **135** cc./min.

AIR VELOCITY:
150 FPM

Test Results

INITIAL PRESSURE DROP of Clean Test Filter
0.09 in. water

FINAL PRESSURE DROP of Loaded Test Filter
0.50 in. water

WEIGHT GAIN on TEST FILTER & Test Frame Trough
575 grams

PAINT HOLDING CAPACITY of TEST FILTER
565 grams = **1.2** lbs.

PAINT RUN-OFF
10 grams

WEIGHT GAIN - FINAL FILTER
0.4 grams = **PENETRATION**

AVERAGE REMOVAL EFFICIENCY of TEST FILTER
99.93 %

EPA 40 CFR Part 63 Compliant

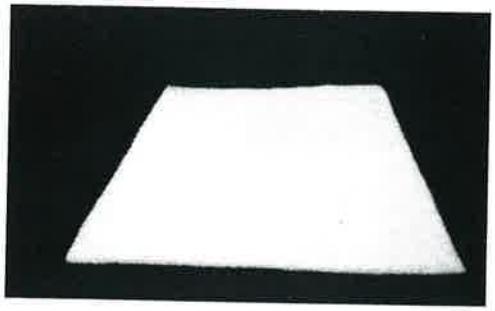

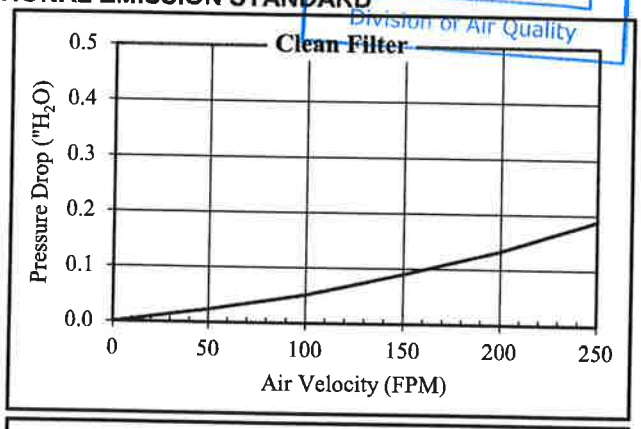

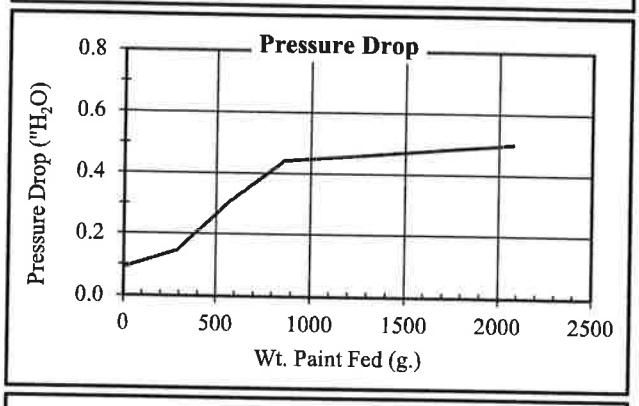

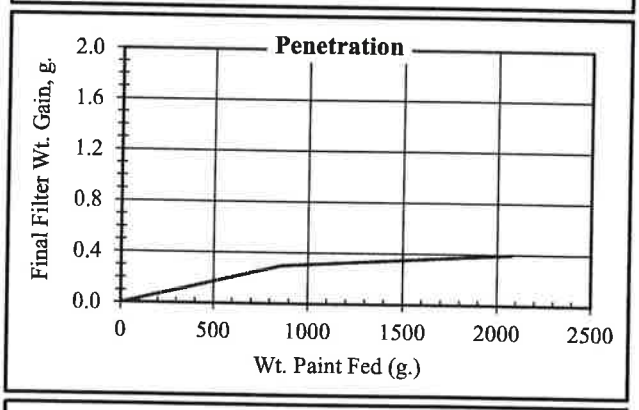

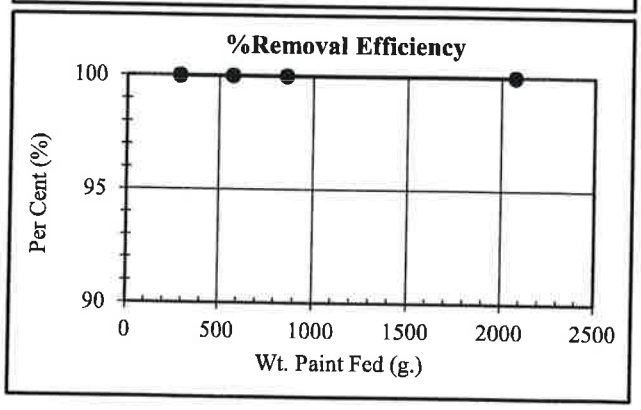

Test Engineer: Jose Tizcareno
Supervising Engineer: K. C. Kwok, Ph.D.

LMS Technologies, Inc.
6423 Cecilia Circle
Bloomington, MN 55439
Tel.: (952) 918-9060
Fax: (952) 918-9061

Part# 1002655-11
3/3/2020

Herkules™

G200

Made in USA

OWNERS MANUAL

INSTRUCTIONS

This manual contains important information concerning the installation and operation of the gun washers listed above.
Read manual thoroughly and keep for future reference

ISO 9001:2015 CERTIFIED

Herkules Patent Numbers
These products have patent protection under one or more of the following patent numbers:

8422142, 8735508, 8714524, 866247, 8652120, 7070167, 5488680, 5195561, 5174317, 4960142, 4793369 and Patents Pending

Website: www.herkules.us
E-mail: info@herkules.us

Herkules Equipment Corporation
2760 Ridgeway Court
Walled Lake, MI 48390-1662 USA

Toll Free: 800-444-4351
Phone: 248-960-7100
Fax: 248 960-7109

Table of Contents

Warranty 3

Model Information 4

Warnings 5-6

Assembly Instructions 7-9

Installation 10

Operation 10-11

Preventive Maintenance 12

Troubleshooting 13

Drawings with Part Lists 14-21

G200 Schematic 22

Herkules Equipment Corporation

A U.S.-based manufacturer, Herkules Equipment Corporation offers a diverse line of products that support multiple industries by improving efficiency, productivity, ergonomics, comfort, and safety in the work environment. The company consists of the three product lines: Herkules, Enkon and BossLifts.

Since 1985, Herkules has designed, engineered and manufactured quality products at our Walled Lake, Michigan facility. Our company supports our products after delivery, with U.S. based customer service, and replacement parts, enabling our customers to proceed with confidence.

To learn more about Herkules, visit http://herkules.us. Contact us at info@herkules.us with any questions or concerns.

Thank you for purchasing a Herkules product!

Warranty

IMPORTANT NOTICE: if you have a problem with your Herkules product,

DO NOT RETURN TO PLACE OF PURCHASE

Contact Herkules: by phone 1-800-444-4351; by email, info@herkules.us; or on the web at herkules.us/contact-us.

At Herkules we take great pride in the construction of our American-made products, and we stand behind their reliability. Our limited liability warranty coverage for Paint Gun Washers warranties the unit for a period of 12 months. Washer pumps have a separate warranty; the Herkules 338 pump is protected for a period of 2 years from the date of purchase. All other pumps, including rinse pumps, are warrantied for 12 months.
This warranty does not apply to equipment damaged from accident, abuse, overload, misuse, negligence, improper installation, abrasive or corrosive materials, or shipping damage.
In the event of product failure, the defective item must be returned, freight prepaid, to the Herkules manufacturing plant for repair or replacement. If repairs are required, Herkules will not be liable for these repairs to take place in the field regardless of the application. Proof of purchase and date of purchase must be confirmed. An RGA* (Returned Goods Authorization) and written approval from Herkules must be obtained before any goods can be shipped to Herkules. We reserve the right to Determine whether failure is due to defective material, normal wear, and / or other causes.

There are no warranties which extend beyond the description on the face hereof. Herkules disclaims any warranty of merchantability or fitness for a particular purpose in connection with the Buyer's purchase of any Product under this agreement. Damages are limited to the sales price of the Herkules system. The terms and conditions herein represent the entire agreement between Herkules and the Buyer. Any prior / future representations do not apply.

***To obtain a RGA, contact Herkules at 1-800-444-4351 and have the item model, serial numbers, and invoice number if applicable.**

Upon receipt of your equipment, please write your purchase information below. Please retain this manual for your records.

Serial Number _____ Model Number _____

Purchase Date _____ Distributor (if applicable) _____

Model Information

Parts bag contents

Part #	Description	Quantity
001-702	Hex Bolt 1/4-20 x 1/2	2 EA.
002-161	Flat Washer #10	2 EA.
008-244	Acorn Nut 1/4-20	2 EA.
001-705	Flat Washer 1/4	2 EA.
6	Ball Valve	1 EA.
83	Hex Bolt 1/4-20 x 1	2 EA.
84	Hex Nut 1/4-20	2 EA.
85	Lock Washer 1/4	4 EA.
1000652	Clevis Pin 1/4 dia.	1 EA.
1000252	Cotter Pin	1 EA.
11957	Actuator	1 EA.
C9A	Nipple 1/8 NPT X 4-1/2	2 EA.
53B	Stem Support Female	2 EA.
M5	Tube 5/32 Blue	30 IN.
M5-BLACK	Tube 5/32 Black	9 IN.
M5-NEUTRAL	Tube 5/32 Clear	13 IN.
005-131	Screw 10-24 x 1/2	2 EA.
005-137	Nylock Nut 10-24	2 EA.
12024	Bracket Lid Mount	1 EA.
338	Pump	1 EA.

*Customer should review and verify all parts are present before starting assembly

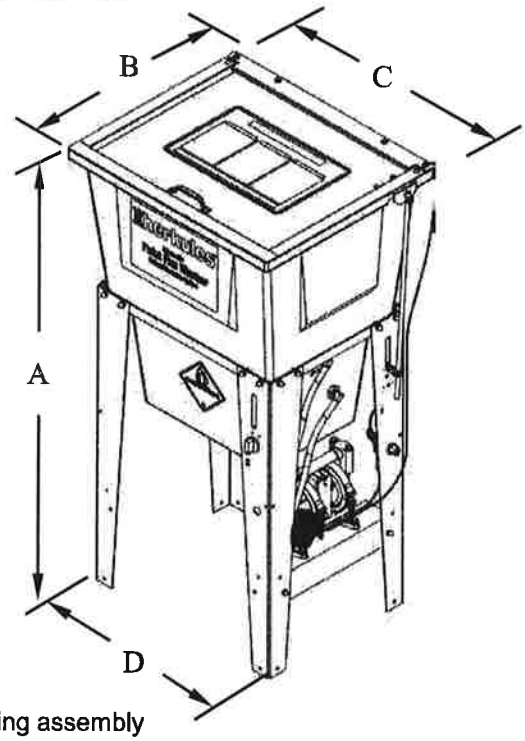

NOTE: Dimensions listed below are overall measurements.

Model	Description	Weight lbs/(kg)	Dimensions in./(mm) A	B	C	D
G200	Two gun, two cup paint gun washer equipped with diaphragm pump, filter-regulator and timer. Cleans exclusively either solvent or water based paints.	68 (31)	46 (1168)	20.625 (524)	24.5 (622)	21.25 (540)

Warning Symbol

⚠ WARNING

This symbol alerts you to the possibility of serious injury or death if you do not follow the instructions.

Caution Symbol

⚠ CAUTION

This symbol alerts you to the possibility of damage to or destruction of equipment if you do not follow the instructions.

⚠ WARNING

EQUIPMENT MISUSE HAZARD

Equipment misuse can cause the equipment to rupture, malfunction, or start unexpectedly and result in serious injury.

- This equipment is for professional use only.
- Read all instruction manuals, tags, and labels before operating the equipment.
- Use the equipment only for its intended use.
- Do not alter or modify this equipment.
- Do not exceed the maximum working pressure of the lowest rated system component.
- Do not operate the gun washer at a pressure above the maximum working pressure rating of the gun(s) being cleaned.
- Route the hoses away from traffic areas, sharp edges, moving parts, and hot surfaces.
- Do not use the hoses to pull the equipment.
- Do not move pressurized equipment.
- Use fluids or solvents that are compatible with the equipment wet parts. Read the fluid and solvent manufacturer's warnings.
- Comply with all applicable local, state and national fire, electrical and other safety regulation.

PRESSURIZED EQUIPMENT HAZARD

Spray from hose leaks, ruptured components, or from operating the gun washer with an open lid can splash fluid in the eyes or on the skin and cause serious injury.

- A safety device has been installed to shut off the pump when the gun washer lid is opened. **Do not tamper with, or alter, this device.**
- Open the gun washer lid slowly.
- Do not prop the gun washer lid open with an object or by any other means.
- Do not stop or deflect fluid leaks with your hand, body, glove, or rag.
- Tighten all fluid connections before operating the equipment.
- Replace worn, damaged, or loose parts immediately.

⚠ WARNING

FIRE AND EXPLOSION HAZARD

Improper grounding, poor air ventilation, open flames, or sparks can cause a hazardous condition and result in fire or explosion and serious injury.

- Ground the equipment. See Installation section (page 10) for grounding procedure.
- Provide fresh air ventilation to avoid the build up of flammable fumes from the cleaning solution.
- Extinguish all open flames or pilot lights in the gun washer area.
- Disconnect all electrical equipment in the gun washer area.
- Keep the gun washer area free of debris, including cleaning solutions, rags, and gasoline.
- Do not turn on any light switch in the gun washer area while operating or if fumes are present.
- Do not smoke in the gun washer area.
- Do not operate a gasoline engine in the gun washer area.
- Follow the gun manufacturer's solvent and other cleaning recommendations.
- Use solvent with the highest possible flash point.
- If there is any static sparking while using the equipment, **stop operation immediately.** Identify and correct the problem.
- Drain the cleaning solution into a proper storage container when gun washer(s) is not in use.

TOXIC FLUID HAZARD

Hazardous fluids or toxic fumes can cause serious injury or death if splashed in eyes or on the skin, swallowed, or inhaled.

- Know the specific hazards of the fluid you are using. Read the fluid manufacturer's warnings.
- Store hazardous fluid in an approved container. Dispose of hazardous fluid according to all local, state and national guidelines.
- Wear the appropriate protective clothing, gloves, eyewear and respirator.
- Pipe and dispose of the exhaust air safely. If diaphragm fails, the fluid may be exhausted along with the air.

Assembly Instructions

Stand and tub connections [Figures 1-4]

STEP 1

Remove stand from box.
Loosen all (16) nuts that attach the legs to the upper frame of the Gun Washer stand.

STEP 2

Position the pump mount bracket between the timer leg assembly and the filter/regulator leg assembly. (These legs have oblong openings on one side)
Attach the pump mount bracket to the stand using (2) 1/4-20 x 3/4" hex bolts, (2) 1/4" lock washers and (2) 1/4" acorn nuts per leg. Hand tighten, then place stand on floor. Verify all (4) legs are sitting flush with the floor, and tighten.

STEP 3

Attach the pump to the stand using the (2) 1/4-20 x 1" hex bolts, (2) 1/4" flat washers, (2) 1/4" lock washers and (2) 1/4" hex nuts per leg [see fig.2].

STEP 4

Attach the ball valve to the reducing nipple on the bottom of the tub. Teflon tape is recommended for a water-tight seal. Hand tighten [see fig.3].
Ensure bulkhead DOES NOT TURN when tightening.

STEP 5

Connect the 16" long fluid outlet tube between the fluid outlet port of the pump and the upper bulkhead on the tub. DO NOT HEAT HOSE [see fig.4].

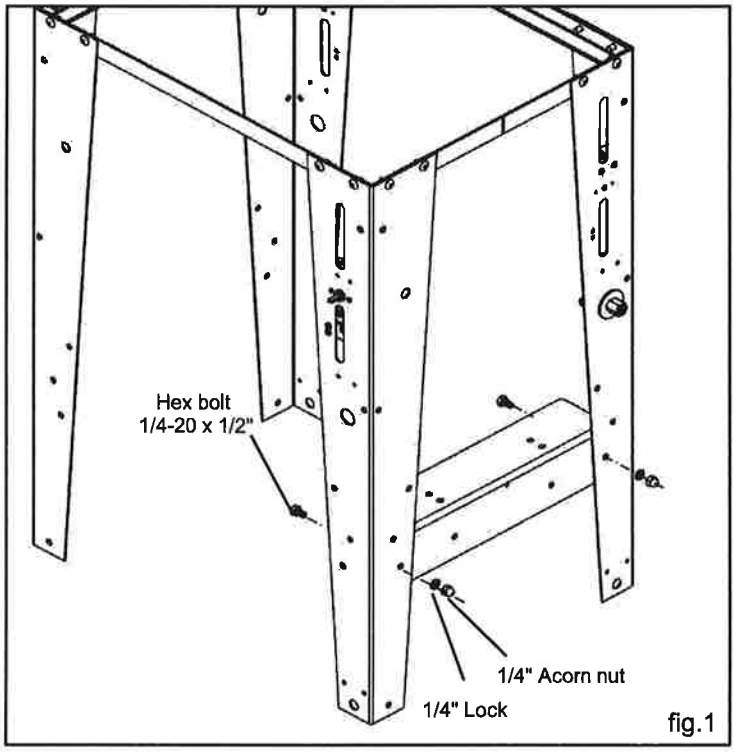

fig.1

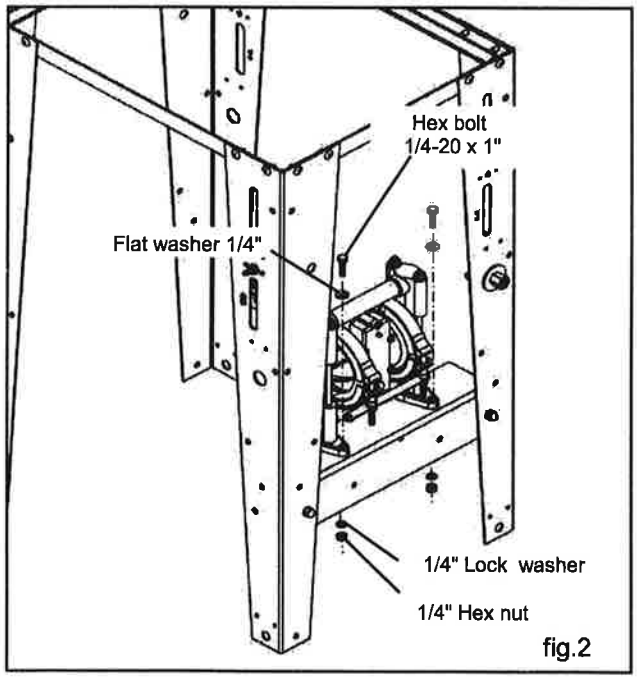

fig.2

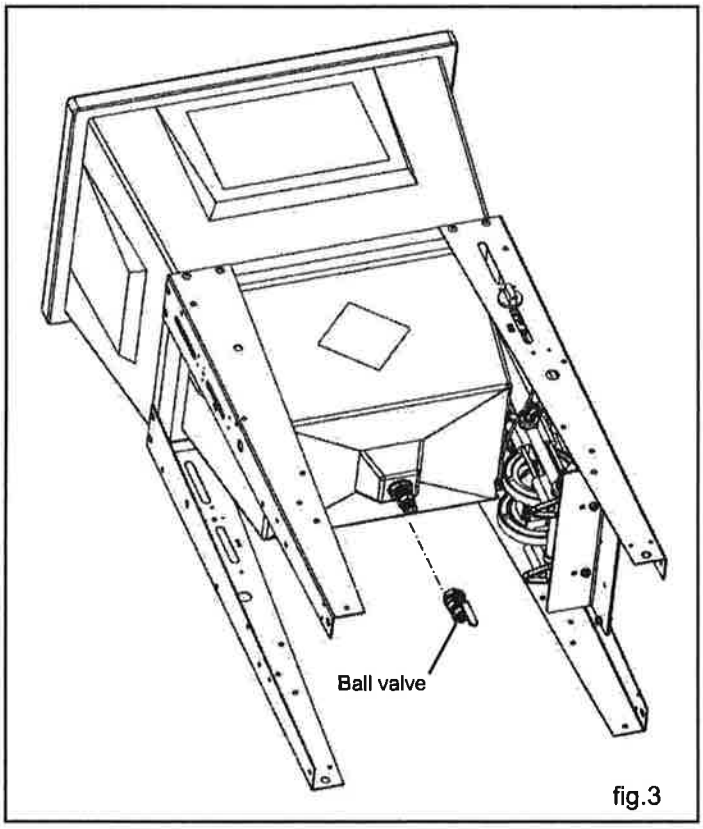

fig.3

Assembly Instructions

Connecting fluid and air hoses

STEP 6

Connect the 17" long fluid inlet tube between the fluid inlet port of the pump and the lower bulkhead on the tub. DO NOT HEAT HOSE [see fig.4].

STEP 7

Connect the black 5/32" air hose between the regulator and the air-in port of the limit valve (located on the rear leg of the gun washer). Press tubing in through the collar until seated. Pull firmly on hose to test for a tight connection. [see fig.4].

Note: Air-in port of limit valve is the port opposite the roller.

STEP 8

Connect the blue 5/32" air hose between the air-in port of limit valve (located on the front leg) and the air-out port of the limit valve (located on the rear leg of the gun washer). Press tubing in through the collar until seated. Pull firmly on hose to test for a tight connection.
NOTE: If these hoses are not correctly connected, the paint gun washer will not start [see fig. 4].

STEP 9

Connect the clear 5/32" air hose between the pump and the air out port of the limit valve (located on the front leg of the gun washer). Press tubing in through the collar until seated. Pull firmly on hose to test for a tight connection. [see fig.4].

Connecting lid, lid rod, and actuator linkage

STEP 10

Mount the lid bracket underneath the lid; mount bracket to lid as shown [see fig. 5].

STEP 11

Mount the lid actuator rod to the bracket. Slide the actuator over the lid rod opposite the drilled end, and hand tighten approximately 4" from end of rod. Then insert the actuator into the large slot in the right rear leg [see fig. 6].

STEP 12

Attach the lid rod to the lid bracket using the 1/4" clevis pin and circular cotter pin supplied [see fig. 5].

STEP 13

To adjust the actuator, close the lid and loosen the set screw on the actuator. Slide the actuator down until it completely closes the limit valve and retighten the set screw [see fig. 6].

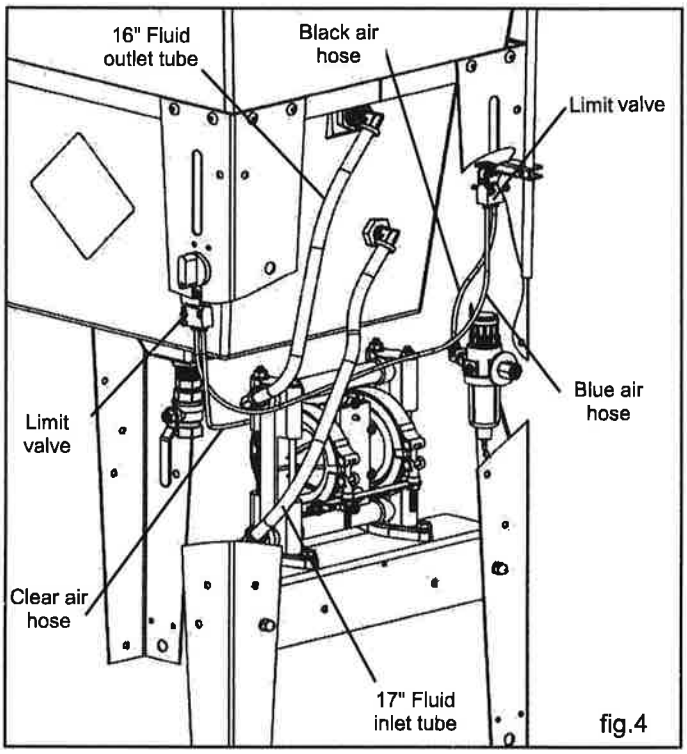

fig.4

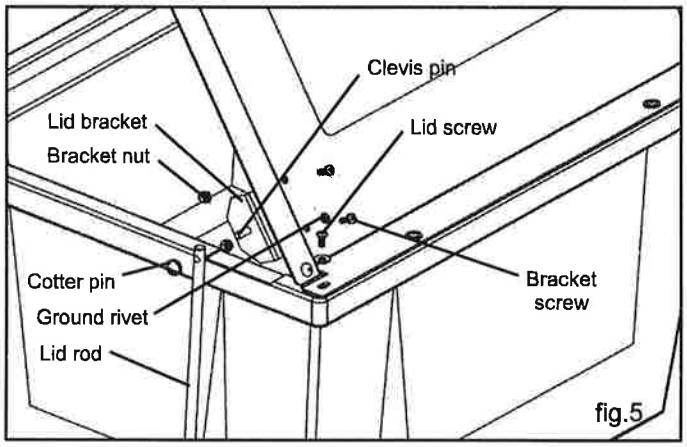

fig.5

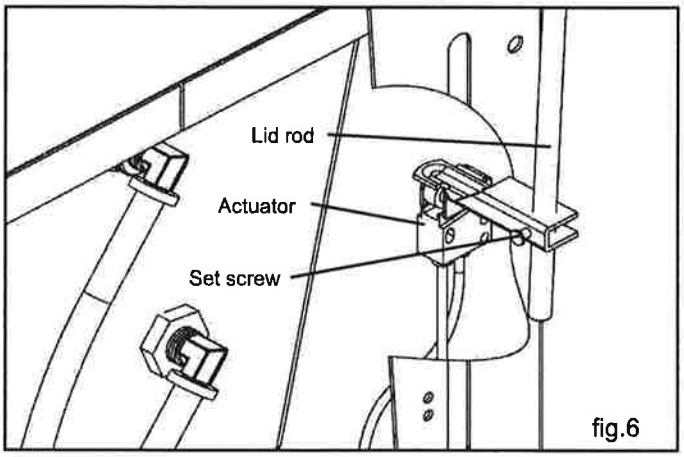

fig.6

Assembly Instructions

Grounding the lid

STEP 14

Verify the ground wire is attached to lid rivet and the other end is attached to the tub [see fig. 7].

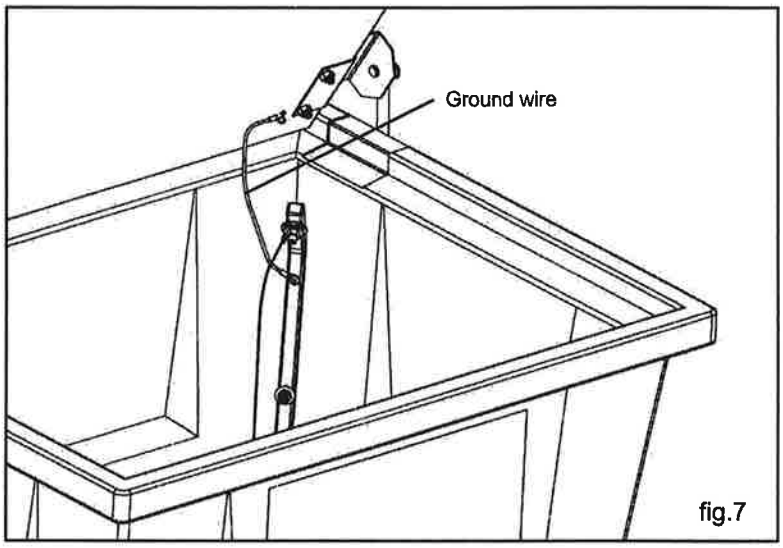

fig.7

Lid Bracket to the Lid Assembly

1) Remove the lid, lid actuator bracket, and hardware from bag.

2) Lid bracket mounts underneath the lid (see Fig. 7)

3) Mount bracket to the lid as shown, then Actuator Rod can be mounted to the Lid Actuator Bracket (see Page 14 G200 Lid Layout in manual).

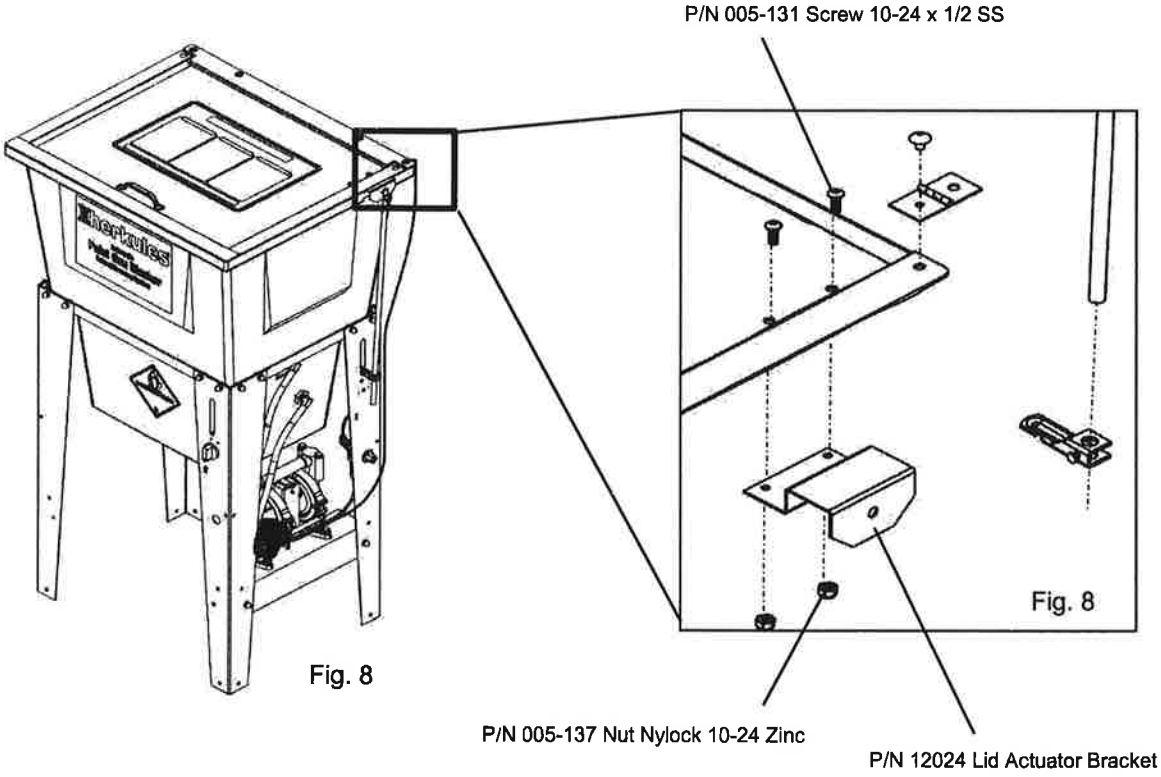

Installation

Installing the Gun Washer

1) Place gun washer on a level surface in a properly ventilated paint mixing room or paint booth.

Grounding the Gun Washer

1) Connect the ground wire on the gun washer's pump to a true earth ground.

2) Ground all equipment used or located in the gun washer area.

Connecting the Air Line

1) Install a 1/4 in. npt male coupler, that is compatible with the quick disconnect of your air supply line, into the air supply port of the filter/regulator located on the right rear leg [see fig. 9].

2) Connect air line with at least 75 psi to the coupler. Filter/regulator is preset. Do not adjust.

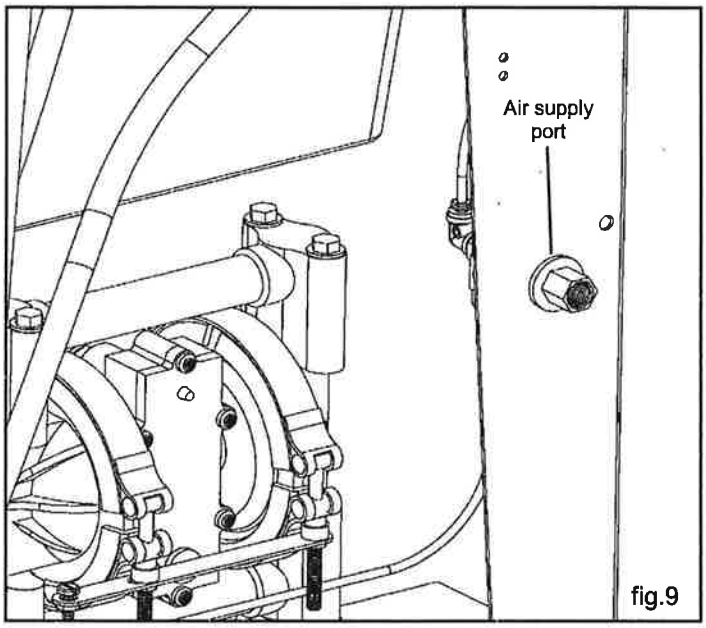

fig.9

Operation

Filling the Gun Washer with Fluid

1) Close ball valve located on the bottom of the tank.

2) Unit is designed to clean EITHER solvent or waterborne EXCLUSIVELY. Pour five gallons (18.9 liters) of high quality cleaning solution into the tub.

Preparing the Equipment to be washed

1) Remove paint cup, or paint line, and the air line from the paint gun.

2) Drain excess paint from cup and gun.

3) Remove all gauges and regulators.

4) Screw on Air Cap Assembly to end of gun [see fig. 10].

5) Lock the gun trigger in the open position by placing the trigger lock around the gun handle and trigger [see fig. 10].

Placing Equipment in the Gun Washer

To clean guns not mentioned here, use the long or short stem supports as needed [see Fig. 10]. For questions or adapter kits, contact your paint gun washer distributor.

Siphon Feed Guns

Place the gun siphon tube on the short stem support.

Gravity Feed Guns (HVLP)

Place long stem support over one of the short stem supports. Place paint inlet of gun on long stem support. Place the air cap assembly over the air inlet of the gun to keep out cleaning solution.

Pressure Feed Guns

Place long stem support over one of the shorter stem supports. Place paint inlet of gun on long stem support.

Pots and Cups

Place pots and/or cups on divider platform over front spray nozzles.

Operation

⚠ CAUTION

All pressure gauges must be removed before placing the equipment in the gun washer to avoid damaging the gauges.

fig. 10

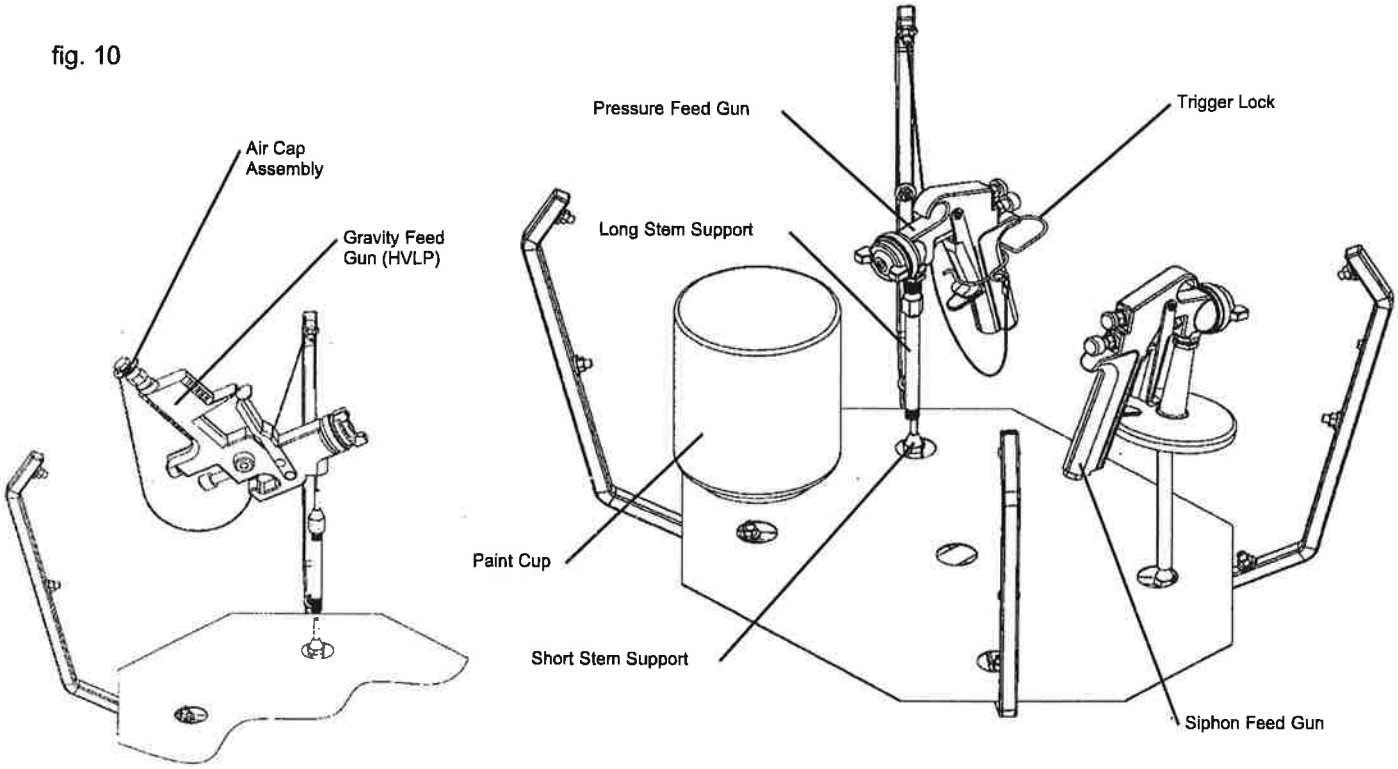

Operating the Gun Washer

1) Make sure all wire trigger locks and other accessories are inside the gun washer tub.

2) If washing only one set of equipment, place empty cans over the unused nozzles and/or stem supports to prevent spray from hitting the underside of the gun washer lid.

3) Close the gun washer lid.

4) Turn the timer knob clockwise 90 degrees to start the gun washer. The gun washer will run for 90 seconds. Turning the timer knob less than 90 degrees will reduce the timing cycle. Paint equipment will clean in 60 to 90 seconds.

5) If the lid is opened prior to the end of the timing cycle, the safety air cutoff switch will stop the gun washer. The gun washer will start again when the lid is closed if time remains on the timer.

Note: Open the lid slowly to minimize vapor escape.

6) Remove the equipment from the gun washer and wipe off any remaining cleaning solution.

Preventive Maintenance

To keep your machine working efficiently, please follow these directions.

1) ALWAYS drain excess paint from cup or pot before placing in gun washer.

2) Drain paint sludge from gun washer tank weekly. Do this after a weekend so that it has settled. Open ball valve and drain until clear solution flows. Add cleaning solution to fill 1" above intake filter.

3) Replace Filter/Regulator yearly. (#11345)

4) Change cleaning solution completely when objects being cleaned become tacky to the touch.

5) Clean inside of tub and intake filter before filling with cleaning solution.

⚠ CAUTION

Do not change the setting of the filter/regulator. This could damage the filter/regulator or pump.

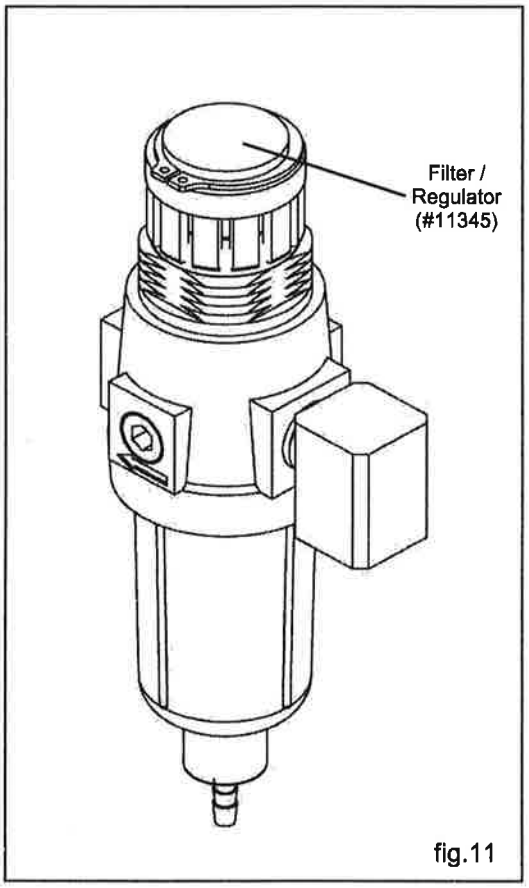

fig.11

Troubleshooting

Problem	Possible Solution	
Gun washer will not turn on.	1	Make sure the air line is properly connected with at least 75 psi. Air pressure is regulated at 75 psi.
	2	Make sure lid is fully closed. Make sure the lid rod actuator is making full contact with the limit valve on the right rear leg.
	3	Check all air connections to ensure that there are no leaks.
	4	Make sure timer cam is engaging the limit valve on the right front leg.
	5	Make sure timer is on and functioning correctly.
Gun washer turns on but pumps slowly or not at all.	1	Make sure intake filter is not clogged (Clean or replace).
	2	Make sure the air line is properly connected with at least 75 psi. Air pressure is regulated at 75 psi.
	3	Check all air connections to ensure that there are no leaks.
	4	Make sure there is 5 gallons of clean solution in the gun washer. The cleaning solution should be an inch above the intake filter.
	5	Make sure lid is fully closed. Make sure the lid rod actuator is making full contact with the limit valve on the right rear leg.
	6	Make sure manifold nozzles and stem supports are not clogged.
Gun washer will not shut off	1	Make sure timer cam is moving. If its not, slightly loosen the nuts holding the limit valve on the right front leg of the stand. Reposition valve and tighten nuts.
	2	Make sure limit valves located on the right front leg or right rear leg of the stand are not stuck in closed position.
	3	Make sure air hoses are connected correctly. **(Refer to assembly steps 8-9 for detailed information.)**

G200 Replacement Parts

	Part #	Description	Quantity	
1	**15171**	**G200 Maintenance Kit**	**1 EA.**	
	Kit Includes:			
1	53A	Stem Support Male	4 EA.	See pg. 18
2	53B	Stem Support Female	4 EA.	See pg. 18
3	1007592	Timer Mechanical w/o Knob	1 EA.	See pg. 20
4	M230-002	Knob for Mechanical Timer	1 EA.	See pg. 20
5	11345	Regulator Assy T17M w/Nut 75psi	1 EA.	
6	12491	Filter Assy w/SS Clamp	1 EA.	See pg. 16
7	M5-BLACK	Tube 5/32 Black	36 IN.	See pg. 16
8	M5	Tube 5/32 Blue	36 IN.	See pg. 16
9	1001441	Muffler 3/8 NPTZ	1 EA.	See pg. 20
10	C9A	Nipple 1/8 NPT x 4-1/2 Brass	2 EA.	See pg. 18
11	54P1	Nozzle Fulljet 65Deg 1/8 NPTM Kynar	12 EA.	See pg. 18
12	1001372	Sticker 1-800 Black Small	1 EA.	
13	M1C	Valve Limit Bottom Ports	1 EA.	See pg. 20
14	1005368	Box Plastic Organizer	1 EA.	
15	22BA	Wire Trigger Lock Assy	2 EA.	See pg. 18
16	1002651	E-Ring 1/2 Shaft SS Clip	2 EA.	See pg. 18
17	12509	Air Cap Assembly w/SS Clip	2 EA.	See pg. 18

Note: Herkules Paint Gun Washers are designed to be easily maintained and repaired. As a minimum sales order is required when purchasing parts, Herkules recommends purchasing a 15171 Maintenance Kit to keep spare parts on hand for quick replacement when needed.

G200 Parts Layout

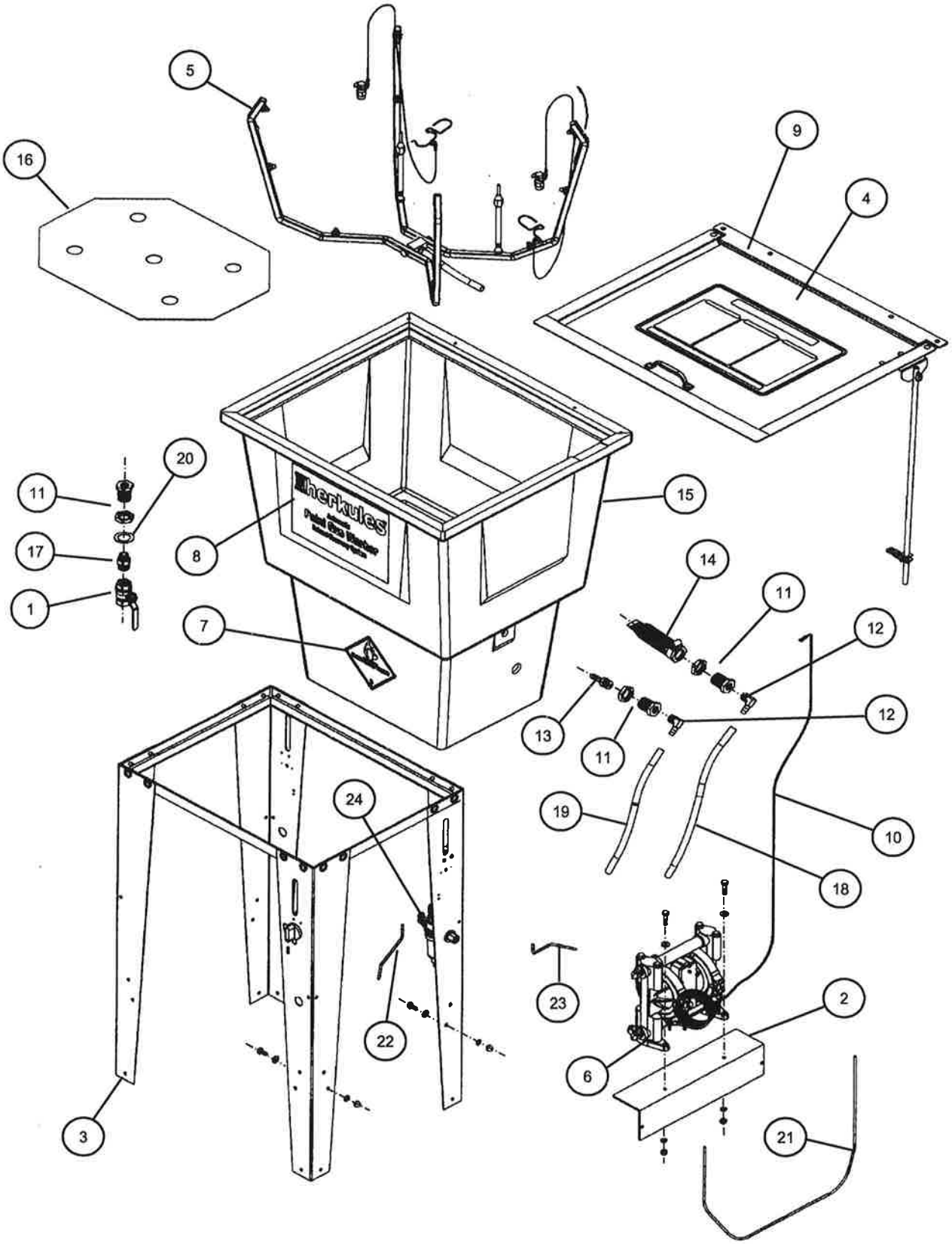

G200 Parts Layout

	Part #	Description	Quantity	
1	6	Ball Valve	1 EA.	
2	1007865	Pump Mounting Bracket	1 EA.	
3	13844	Stand Assembly	1 EA.	See pg. 16
4	19196	Lid Assembly	1 EA.	See pg. 14
5	12490	Manifold Assembly	1 EA.	See pg. 15
6	12517	Pump Assembly	1 EA.	See pg. 16
7	1000651	Flammable Caution Sticker	1 EA.	
8	1001706	Front Decal	1 EA.	
9	12321	Lid Stop	1 EA.	
10	002-120A-72	Ground Wire	2 EA.	
11	1002644	Bulkhead with Nut - Brass	3 EA.	
12	1006470	Hose Barb 3/8 x 3/8 NPT 90° - Brass	2 EA.	
13	1002654	Hose Barb 3/8 x 3/8 NPT - Brass	1 EA.	
14	12491	Filter for Pump Inlet	1 EA.	See pg. 14
15	13242	Tub	1 EA.	
16	25D	Divider	1 EA.	
17	62	Reducing Nipple - Brass	1 EA.	
18	64PE	Hose Inlet	17 IN.	
19	64PE	Hose Outlet	16 IN.	
20	85B	Washer 1-1/2 x 1 - Nylon	2 EA.	
21	M5	Tube 5/32 Plastic - Blue	30 IN.	See pg. 14
22	M5-BLACK	Tube 5/32 Plastic - Black	9 IN.	See pg. 14
23	M5-NEUTRAL	Tube 5/32 Plastic - Neutral	13 IN.	
24	11345	Filter / Regulator	1 EA.	

Note: *For parts shown but not identified refer to assembly layouts on pages 13-17*

G200 Lid Layout

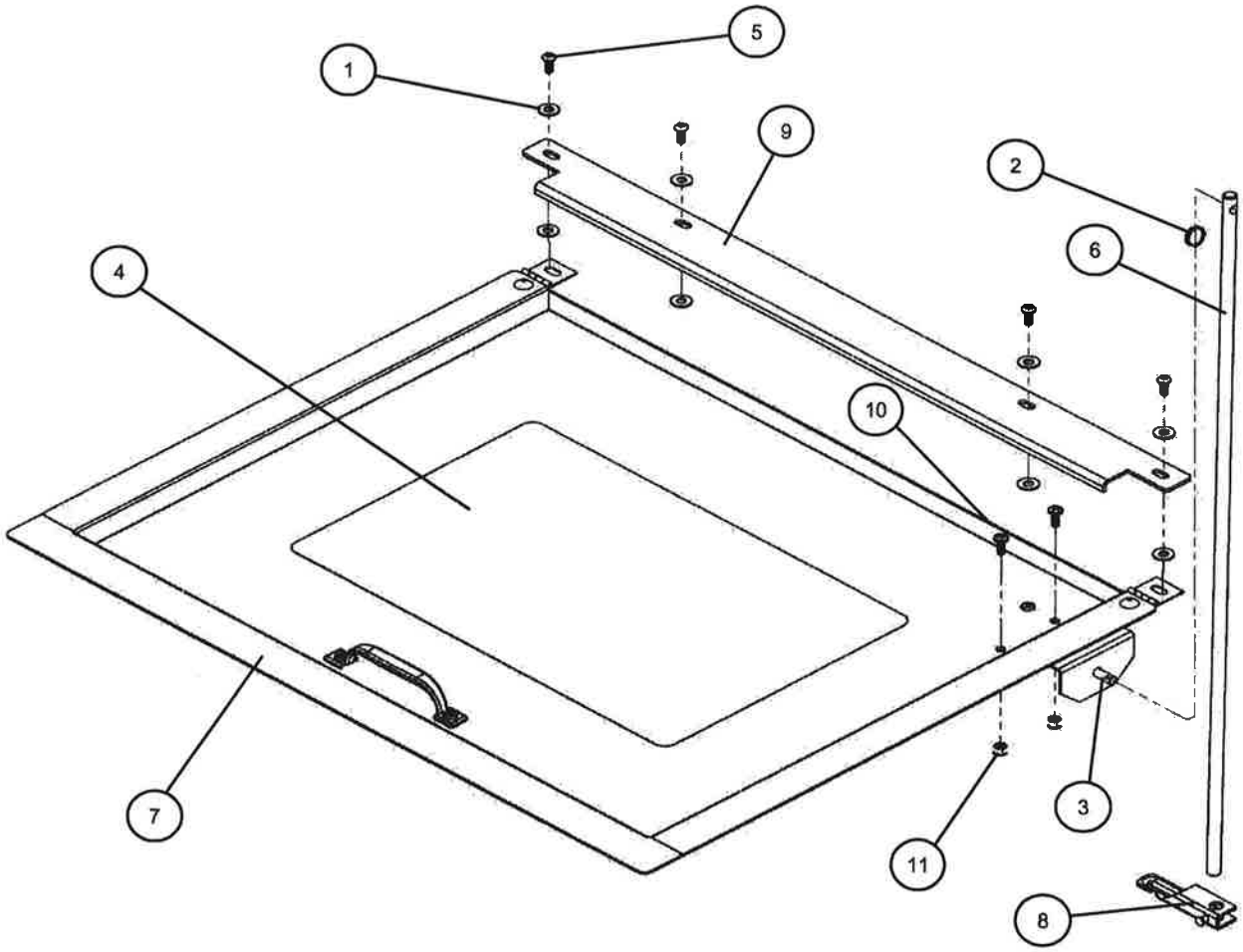

	Part #	Description	Quantity
1	002-161	Washer Flat #10 USS - Zinc	8 EA.
2	1000252	Actuator Clip Ring	1 EA.
3	1000652	Actuator Pin	1 EA.
4	1001708	Lid Sticker	1 EA.
5	1002546	Screw 10-24 x 1/2	4 EA.
6	1002572	Actuator Rod	1 EA.
7	19196	Lid Assembly	1 EA.
8	11957	Actuator Bracket Notched	1 EA.
9	12321	Lid Stop	1 EA.
10	005-131	Screw 10-24 x 1/2 - Stainless	2 EA.
11	005-137	Nylock Nut 10-24	2 EA.

Note: *Parts are shown for reference purposes only and are not necessarily part of a Herkules assembly.*

G200 Manifold Layout

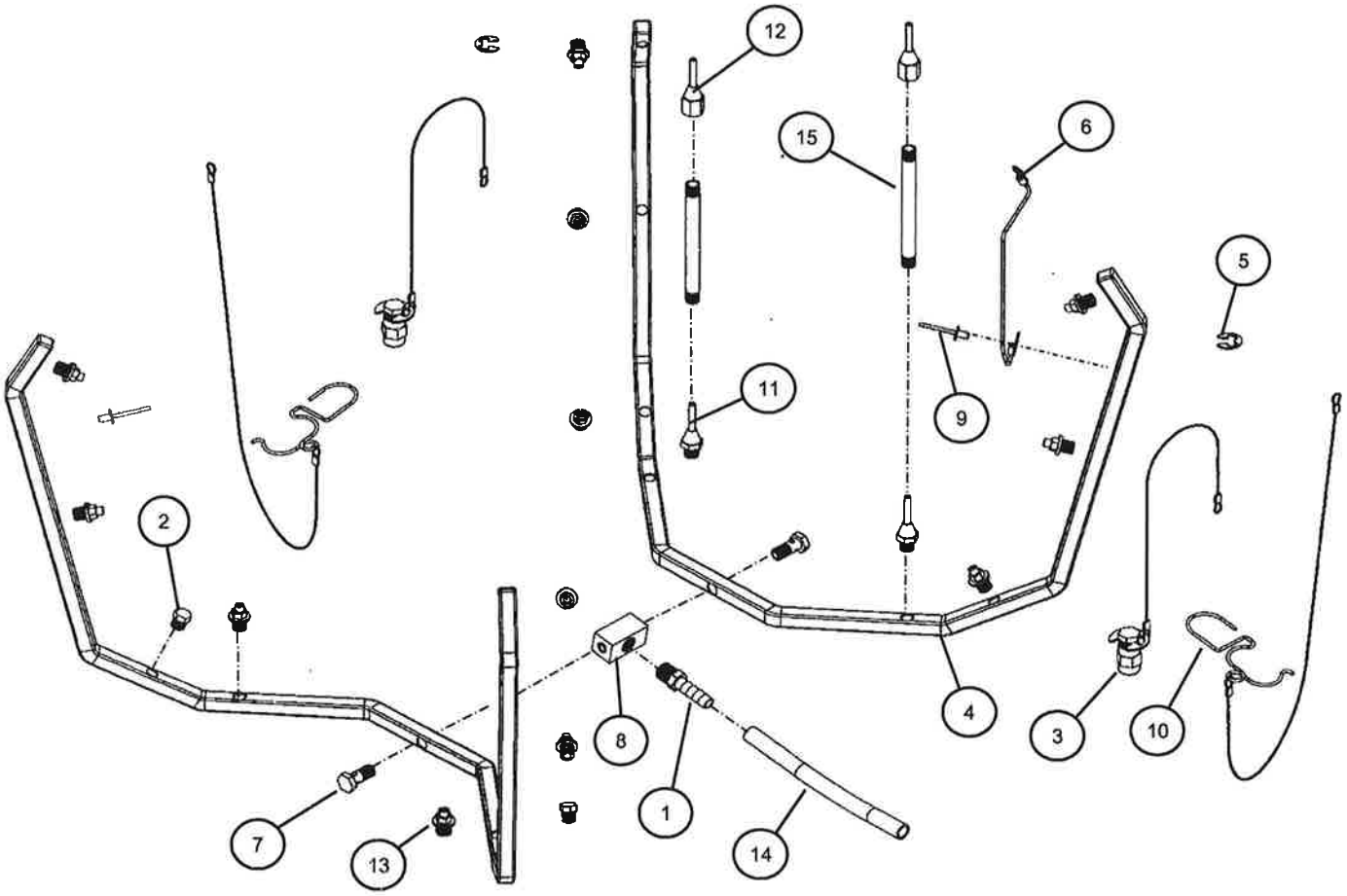

	Part #	Description	Quantity	
1	57	Hose Barb 3/8 x 1/4 NPT - Brass	1 EA.	
2	59	Hex Plug 1/8 NPT - Brass	2 EA.	
3	12509	Air Cap Assembly - Brass and Stainless	2 EA.	See pg. 14
4	1002321	Manifold Half - Stainless	2 EA.	
5	1002651	E-ring - Stainless	2 EA.	See pg. 14
6	002-121A-6	Manifold Ground Wire	1 EA.	
7	002-136S	Manifold Bolt - Stainless	2 EA.	
8	002-137	Manifold Block	1 EA.	
9	002-192	Ground Wire Rivet	2 EA.	
10	22BA	Trigger Lock Assembly	2 EA.	See pg. 14
11	53A	Stem Support Male	2 EA.	See pg. 14
12	53B	Stem Support Female	2 EA.	See pg. 14
13	54P1	Full jet Nozzle - White	12 EA.	See pg. 14
14	64PE	Manifold Hose	6.5 IN.	
15	C9A	Nipple 4-1/2" - Brass	2 EA.	See pg. 14

Note: *Parts are shown for reference purposes only and are not necessarily part of a Herkules assembly.*

G200 Pump and Legs Layout

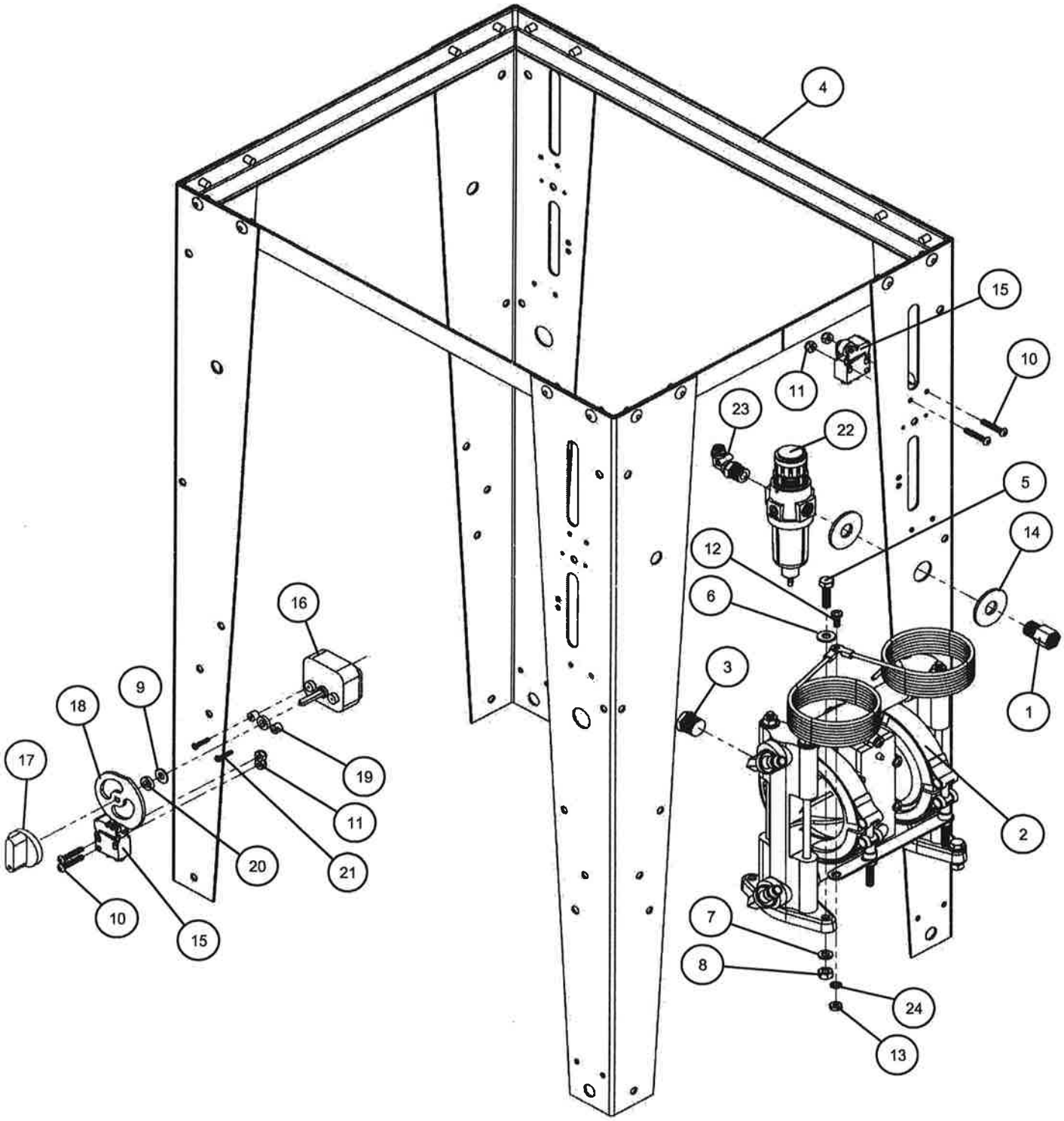

G200 Pump and Legs Layout

	Part #	Description	Quantity	
1	67	Adaptor 1/4 NPT - Brass	1 EA.	
2	12517	Pump Assembly	1 EA.	
3	1001441	Muffler	1 EA	See pg. 14
4	13844	Stand Assembly	2 EA.	
5	83	Bolt Hex Full 1/4-20 x 1 GD5 Z	2 EA.	
6	001-705	Washer Flat 1/4 USS	2 EA	
7	85	Washer Lock 1/4 Z	2 EA.	
8	84	Nut Hex 1/4-20 Z	2 EA.	
9	002-161	Washer Flat #10 USS - Zinc	1 EA.	
10	002-171	Screw 8-32 x 1 - Black	4 EA.	
11	002-172	Nut Nylock 8-32 - Zinc	4 EA.	
12	005-131	Screw 10-24 x 1/2 - Stainless	1 EA.	
13	005-132	Nut Hex 10-24 - Stainless	1 EA.	
14	85I	Washer Flat 1/2 USS Z	2 EA.	
15	M1C	Limit Valve - Gold	2 EA.	See pg. 14
16	1007592	Timer	1 EA.	See pg. 14
17	M230-002	Knob for Timer	1 EA.	See pg. 14
18	M230-003	Cam For Timer	1 EA.	
19	M230-004	Spacer 1/4" Thick - Nylon	2 EA.	
20	M230-005	Spacer 1/8" Thick - Nylon	2 EA.	
21	M230-006	Timer Screw #4 x 5/8	2 EA.	
22	11345	Filter / Regulator	1 EA.	
23	24E	Washer Lock Int Tooth #10 Z	1 EA.	

Note: *Parts are shown for reference purposes only and are not necessarily part of a Herkules assembly.*

G200 Hardware Layout

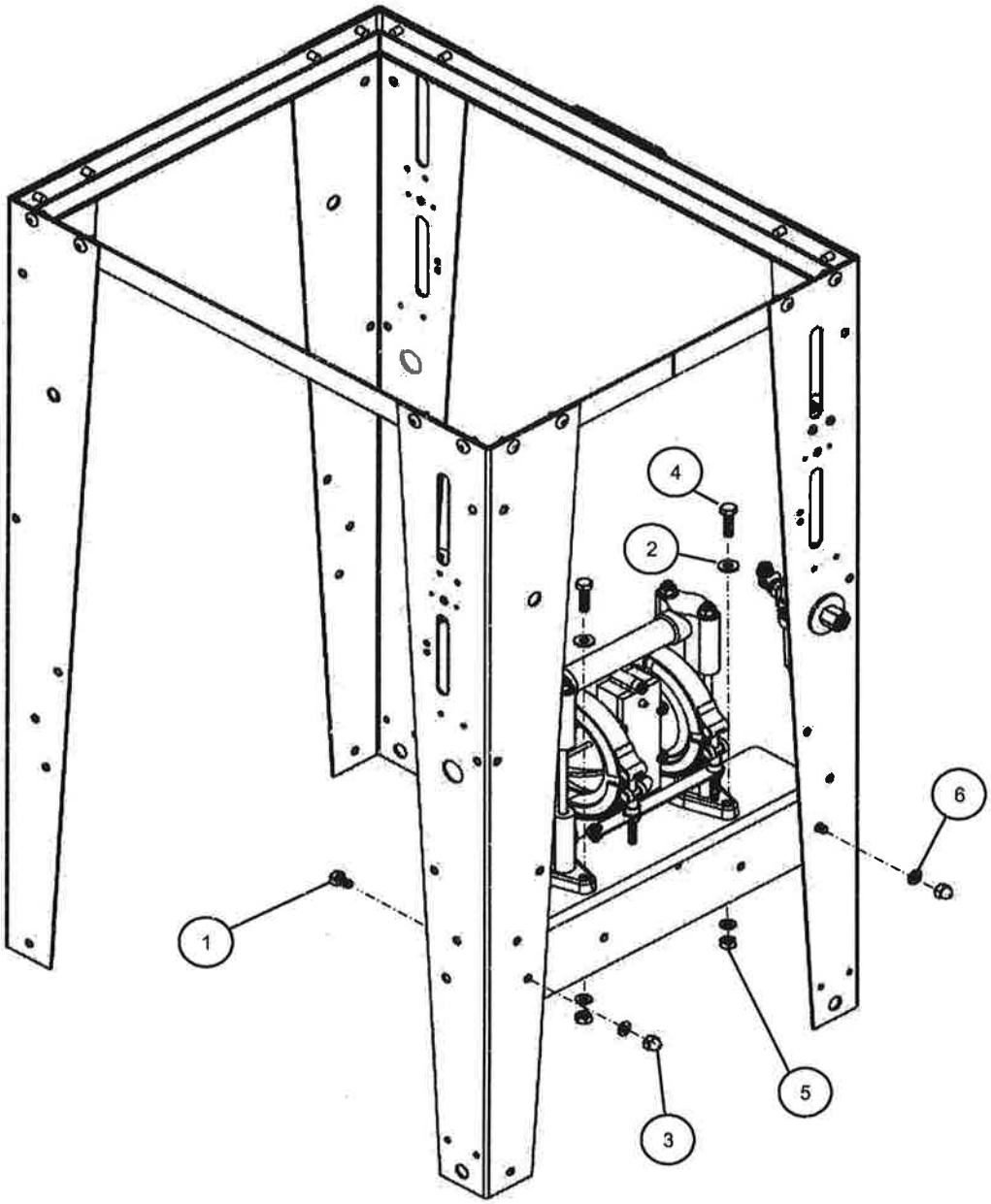

	Part #	Description	Quantity
1	001-702	Bolt Hex 1/4-20 x 1/2 - Zinc	2 EA.
2	001-705	Washer Flat 1/4 USS - Zinc	2 EA.
3	008-244	Acorn Nut 1/4-20 - Nickel	2 EA.
4	83	Bolt Hex 1/4-20 x 1 - Zinc	2 EA.
5	84	Nut Hex 1/4-20 - Zinc	2 EA.
6	85	Washer Lock 1/4 - Zinc	4 EA.

G200 Schematic

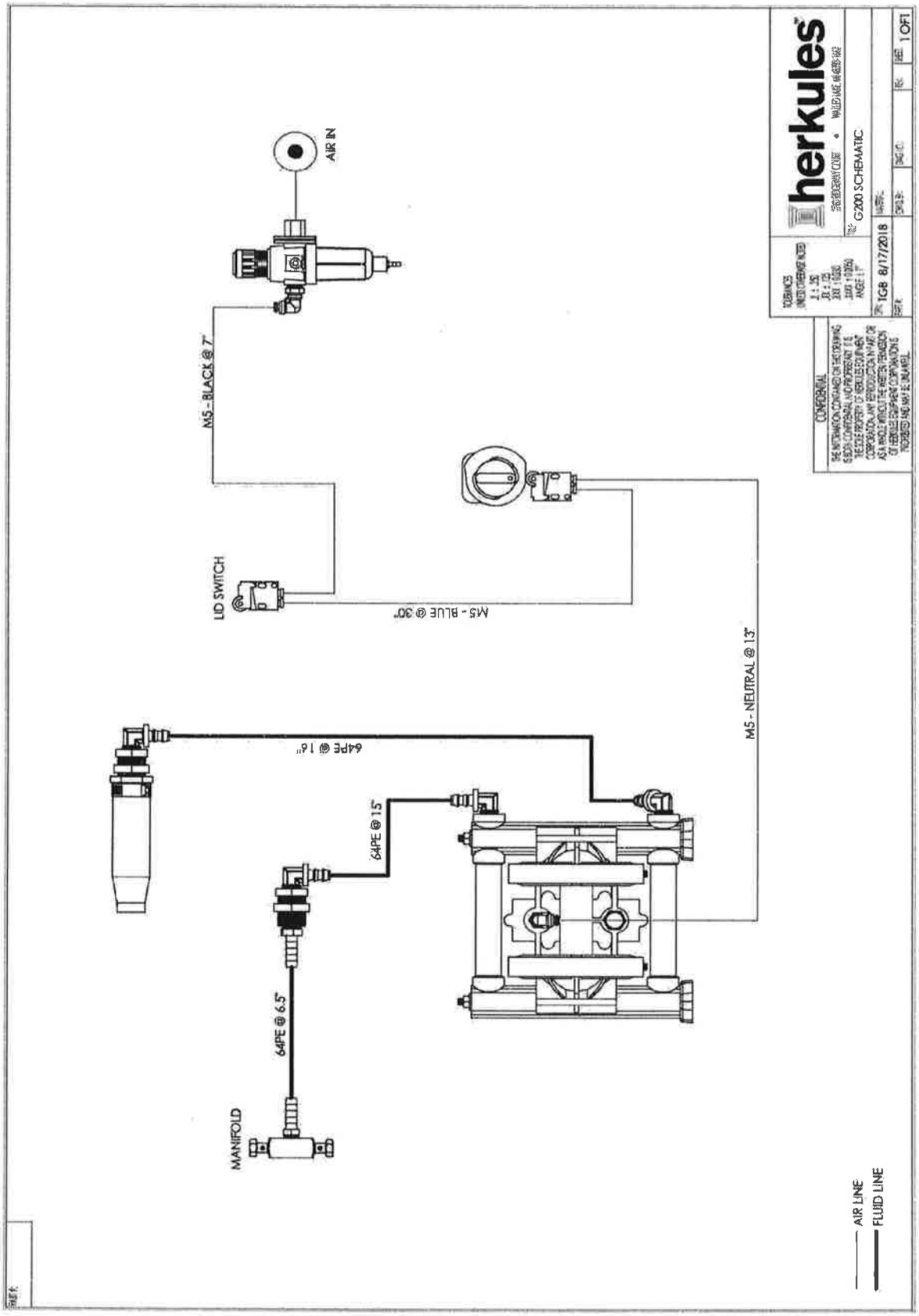

VIETEK

Safety Data Sheet

SECTION 1. PRODUCT AND COMPANY IDENTIFICATION

Product identifier	**Premium Wash Thinner**
Other means of identification	
Product code	**36-300**
Recommended use	Solvent

Manufacturer/Importer/Supplier/Distributor information

Company name	NATIONAL COATINGS & SUPPLIES
Address	4900 FALLS OF NEUSE ROAD, SUITE 150 RALEIGH, NC 27609
Telephone	866-529-1682
Website	www.nationalcoatingsandsupplies.com
Emergency phone number	EMERGENCY 24 Hrs. 800-424-9300 ChemTrec

SECTION 2. HAZARDS IDENTIFICATION

GHS Classification

Flammable liquids	Category 2
Acute toxicity (Oral)	Category 3
Acute toxicity (Inhalation)	Category 3
Acute toxicity (Dermal)	Category 3
Skin irritation	Category 2
Eye irritation	Category 2A
Germ cell mutagenicity	Category IB
Carcinogenicity	Category 2
Reproductive toxicity	Category 2
Specific target organ toxicity - single exposure	Category 1 (Eyes, Central nervous system)

Specific target organ toxicity - single exposure	Category 3 (Central nervous system)
Specific target organ toxicity - repeated exposure (Inhalation)	Category 2 (Auditory system, Eyes)
Aspiration hazard	Category 1

GHS Label element

Hazard pictograms

Signal word	Danger
Hazard statements	H225 Highly flammable liquid and vapour. H301 + H311 + H331 Toxic if swallowed, in contact with skin or if inhaled H304 May be fatal if swallowed and enters airways. H315 Causes skin irritation. H319 Causes serious eye irritation. H336 May cause drowsiness or dizziness. H340 May cause genetic defects. H351 Suspected of causing cancer. H361 Suspected of damaging fertility or the unborn child. H370 Causes damage to organs (Eyes, Central nervous system). H373 May cause damage to organs (Auditory system, Eyes) through prolonged or repeated exposure if inhaled.
Precautionary statements	**Prevention:** P201 Obtain special instructions before use. P202 Do not handle until all safety precautions have been read and understood. P210 Keep away from heat, hot surfaces, sparks, open flames and other ignition sources. No smoking. P233 Keep container tightly closed. P240 Ground/bond container and receiving equipment. P241 Use explosion-proof electrical/ ventilating/ lighting/ equipment. P242 Use only non-sparking tools. P243 Take precautionary measures against static discharge. P260 Do not breathe dust/ fume/ gas/ mist/ vapours/ spray.

P264 Wash skin thoroughly after handling.
P270 Do not eat, drink or smoke when using this product.
P271 Use only outdoors or in a well-ventilated area.
P280 Wear protective gloves/ eye protection/ face protection.
P281 Use personal protective equipment as required.
Response:
P301 + P310 IF SWALLOWED: Immediately call a POISON CENTER or doctor/ physician.
P301 + P310 + P330 IF SWALLOWED: Immediately call a POISON CENTER or doctor/ physician. Rinse mouth. P303 + P361 + P353 IF ON SKIN (or hair): Remove/ Take *off* immediately all contaminated clothing. Rinse skin with water/ shower.
P304 + P340 + P311 IF INHALED: Remove victim to fresh air and keep at rest in a position comfortable for breathing. Call a POISON CENTER or doctor/ physician.
P305 + P351 + P338 IF IN EYES: Rinse cautiously with water for several minutes. Remove contact lenses, if present and easy to do. Continue rinsing.
P307 + P311 IF exposed: Call a POISON CENTER or doctor/ physician.
P331 Do NOT induce vomiting.
P332 + P313 If skin irritation occurs: Get medical advice/ attention.
P337 + P313 If eye irritation persists: Get medical advice/ attention.
P362 Take *off* contaminated clothing and wash before reuse.
P370 + P378 In case of fire: Use dry sand, dry chemical or alcohol-resistant foam for extinction.
Storage:
P403 + P233 Store in a well-ventilated place. Keep container tightly closed.
P403 + P235 Store in a well-ventilated place. Keep cool. P405 Store locked up.
Disposal:
P501 Dispose of contents/ container to an approved waste disposal plant.

Potential Health Effects

Carcinogenicity:

IARC	Group 2B: Possibly carcinogenic to humans	
	64742-49-0	Naphtha (pet), hydrotreated It
	64742-89-8	Solvent naphtha (pet), It

aliph.

ACGIH No component of this product present at levels greater than or equal to 0.1% is identified as a carcinogen or potential carcinogen by ACGIH.

OSHA No component of this product present at levels greater than or equal to 0.1% is identified as a carcinogen or potential carcinogen by OSHA.

NTP No component of this product present at levels greater than or equal to 0.1% is identified as a known or anticipated carcinogen by NTP.

Emergency Overview

Appearance	liquid
Colour	clear, colourless
Hazard Summary	No information available.

SECTION 3. COMPOSITION/INFORMATION ON INGREDIENTS

Substance / Mixture :

Mixture **Hazardous components**

CAS-No.	Chemical Name	Concentration (%)
67-56-1	Methanol	30 - 50
108-88-3	Toluene	30 - 50
67-64-1	Acetone	10 - 20
64742-49-0	Naphtha (pet), hydrotreated It	0 - 20
64742-89-8	Solvent naphtha (pet), It aliph.	0 - 20
68410-97-9	Distillates, pet, It dist hydrotreat process, low-boil	0 - 20
142-82-5	Heptane	0.1 - 1

Special Notes: Functionally equivalent petroleum streams may be found in this preparation at varying concentrations.

SECTION 4. FIRST AID MEASURES

General advice

Move out of dangerous area.
Consult a physician.
Show this safety data sheet to the doctor in attendance

	Symptoms of poisoning may appear several hours later. Do not leave the victim unattended.
If inhaled	Consult a physician after significant exposure. If unconscious place in recovery position and seek medical advice.
In case of skin contact	If skin irritation persists, call a physician. If on skin, rinse well with water. If on clothes, remove clothes.
In case of eye contact	Immediately flush eye(s) with plenty of water. Remove contact lenses. Protect unharmed eye. Keep eye wide open while rinsing. If eye irritation persists, consult a specialist.
If swallowed	Keep respiratory tract clear. Do NOT induce vomiting. Do not give milk or alcoholic beverages. Never give anything by mouth to an unconscious person. If symptoms persist, call a physician. Take victim immediately to hospital.

SECTION 5 FIREFIGHTING MEASURES

Suitable extinguishing media	Alcohol-resistant foam Carbon dioxide (CO2) Dry chemical
Unsuitable extinguishing media	High volume water jet
Specific hazards during firefighting	Do not allow run-off from fire fighting to enter drains or water courses.
Hazardous combustion products	No hazardous combustion products are known
Specific extinguishing methods	Use a water spray to cool fully closed containers.
Further information	Collect contaminated fire extinguishing water separately. This must not be discharged into drains. Fire residues and contaminated fire extinguishing wa-

	ter must be disposed of in accordance with local regu-lations. For safety reasons in case of fire, cans should be stored separately in closed containments.
Special protective equipment for firefighters	Wear self-contained breathing apparatus for fire-fighting if necessary.

NFPA Flammable and Combustible Liquids Classification:
Flammable Liquid Class 1B

SECTION 6. ACCIDENTAL RELEASE MEASURES

Personal precautions, protective equipment and emergency procedures	Use personal protective equipment. Ensure adequate ventilation. Remove all sources of ignition. Evacuate personnel to safe areas. Beware of vapours accumulating to form explosive concentrations. Vapours can accumulate in low areas.
Environmental precau-tions	Prevent product from entering drains. Prevent further leakage or spillage if safe to do so. If the product contaminates rivers and lakes or drains inform respective authorities.
Methods and materials for containment and cleaning up	Contain spillage, and then collect with non-combustible absorbent material, (e.g. sand, earth, diatomaceous earth, vermiculite) and place in con-tainer for disposal according to local / national regula-tions (see section 13).

SECTION 7. HANDLING AND STORAGE

Advice on safe handling	Avoid formation of aerosol. Do not breathe vapours/dust. Avoid exposure - obtain special instructions before use. Avoid contact with skin and eyes. For personal protection see section 8. Smoking, eating and drinking should be prohibited in the application area. Take precautionary measures against static discharg-es. Provide sufficient air exchange and/or exhaust in work rooms. Container may be opened only under exhaust ventila-tion hood.

Open drum carefully as content may be under pressure.
Dispose of rinse water in accordance with local and national regulations.

Conditions for safe storage

No smoking.
Keep container tightly closed in a dry and well-ventilated place.
Containers which are opened must be carefully re-sealed and kept upright to prevent leakage. Observe label precautions.
Electrical installations / working materials must comply with the technological safety standards.

SECTION 8. EXPOSURE CONTROLS/PERSONAL PROTECTION

Components with workplace control parameters

CAS-No.	Components	Value type (Form of exposure)	Control parameters / Permissible concentration	Basis
67-56-1	Methanol	TWA	200 ppm	ACGIH
		STEL	250 ppm	ACGIH
		TWA	200 ppm 260 mg/m3	NIOSH REL
		ST	250 ppm 325 mg/m3	NIOSH REL
		TWA	200 ppm 260 mg/m3	OSHA Z-1
		STEL	250 ppm 325 mg/m3	OSHA PO
		TWA	200 ppm 260 mg/m3	OSHA PO
108-88-3	Toluene	TWA	20 ppm	ACGIH
		TWA	100 ppm 375 mg/m3	NIOSH REL
		ST	150 ppm 560 mg/m3	NIOSH REL
		TWA	200 ppm	OSHA Z-2
		CEIL	300 ppm	OSHA Z-2
		Peak	500 ppm	OSHA Z-2
		TWA	100 ppm 375 mg/m3	OSHA PO
		STEL	150 ppm 560 mg/m3	OSHA PO
67-64-1	Acetone	TWA	500 ppm	ACGIH

		STEL	750 ppm	ACGIH
		TWA	250 ppm 590 mg/m3	NIOSH REL
		TWA	1,000 ppm 2,400 mg/m3	OSHA Z-1
		TWA	750 ppm 1,800 mg/m3	OSHA PO
		STEL	1,000 ppm 2,400 mg/m3	OSHA PO
64742-49-0	Naphtha (pet), hydrotreat-ed It	TWA	500 ppm 2,000 mg/m3	OSHA Z-1
		TWA	400 ppm 1,600 mg/m3	OSHA PO
64742-89-8	Solvent naphtha (pet), It aliph.	TWA	500 ppm 2,000 mg/m3	OSHA Z-1
		TWA	400 ppm 1,600 mg/m3	OSHA PO
142-82-5	Heptane	TWA	85 ppm 350 mg/m3	NIOSH REL
		C	440 ppm 1,800 mg/m3	NIOSH REL
		TWA	500 ppm 2,000 mg/m3	OSHA Z-1
		TWA	400 ppm 1,600 mg/m3	OSHA PO
		STEL	500 ppm 2,000 mg/m3	OSHA PO

Biological occupational exposure limits

Components	CAS-No.	Control parame-ters	Biological specimen	Sam-piing time	Permissi-ble con-centration	Basis
Methanol	67-56-1	Methanol	Urine	End of shift (As soon as possible after expo-sure ceases)	15 mg/I	ACGIH BEi
Toluene	108-88-3	Toluene	In blood	Prior to last shift of work-week	0.02 mg/I	ACGIH BEi
		Toluene	Urine	End of shift (As soon as	0.03 mg/I	ACGIH BEi

				possible after expo-sure ceases)		
		o-Cresol	Urine	End of shift (As soon as possible after expo-sure ceases)	0.3 mg/g Creatinine	ACGIH **BEi**
Acetone	67-64-1	Acetone	Urine	End of shift (As soon as possible after expo-sure ceases)	50 mg/I	ACGIH **BEi**

Personal protective equipment

Respiratory protection	No personal respiratory protective equipment normally required. In the case of vapour formation use a respirator with an approved filter.
Hand protection Remarks	The suitability for a specific workplace should be dis-cussed with the producers of the protective gloves.
Eye protection	Eye wash bottle with pure water Tightly fitting safety goggles Wear face-shield and protective suit for abnormal pro-cessing problems.
Skin and body protection	impervious clothing Choose body protection according to the amount and concentration of the dangerous substance at the work place.
Hygiene measures	Avoid contact with skin, eyes and clothing. When using do not eat or drink. When using do not smoke. Wash hands before breaks and immediately after handling the product.

SECTION 9. PHYSICAL AND CHEMICAL PROPERTIES

Appearance	liquid
Colour	clear, colourless
Odour	No data available
Odour Threshold	No data available
pH	No data available
Freezing Point	No data available
Boiling Point (Boiling point/boiling range)	56 - 150 °C (133 - 302 °F)
Flash point	>= -20.00 °C (-4.00 °F)
Evaporation rate	No data available
Flammability (solid, gas)	No data available
Burning rate	No data available
Upper explosion limit	7 - 36.5 %(V)
Lower explosion limit	0.8 - 6 %(V)
Vapour pressure	231 mmHg @ 25 °C (77 °F) Calculated Vapor Pressure
Relative vapour density	No data available
Relative density	0.808 @ 20 °C (68 °F)
Density	0.808 g/cm3 @ 20 °C (68 °F)
Bulk density	No data available
Water solubility	No data available
Solubility in other solvents	No data available
Partition coefficient: n-octanol/water	No data available
Auto-ignition temperature	No data available
Thermal decomposition	No data available

Regulatory VOC (lbs/gal)	**6.76**
Regulatory VOC (g/l)	**810.03**
Actual VOC (lbs/gal)	**5.97**
Actual VOC (g/l)	**715.36**

SECTION 10. STABILITY AND REACTIVITY

Reactivity	No dangerous reaction known under conditions of normal use.
Chemical stability	Stable under normal conditions.
Possibility of hazardous reactions	Vapours may form explosive mixture with air.
Conditions to avoid	Keep away from heat, flame, sparks and other ignition sources. Extremes of temperature and direct sunlight.
Incompatible materials	Acids alkalis aluminum Amines Ammonia halogens Lead Peroxides Reducing agents Strong bases Strong oxidizing agents Zinc metal salts

SECTION 11. TOXICOLOGICAL INFORMATION

Acute toxicity

Product:

Acute oral toxicity	Acute toxicity estimate : 249.97 mg/kg Method: Calculation method
Acute inhalation toxicity	Acute toxicity estimate : 7.5 mg/l Exposure time: 4 h Test atmosphere: vapour

	Method: Calculation method
Acute dermal toxicity	Acute toxicity estimate : 749.98 mg/kg Method: Calculation method

Components:

67-56-1:

Acute oral toxicity	LD50 (rat): 100 mg/kg Assessment: The component/mixture is toxic after single ingestion.
Acute inhalation toxicity	LC50 (rat): 5 mg/l Assessment: The component/mixture is toxic after short term inhalation.
Acute dermal toxicity	LD50 (rabbit): 300 mg/kg Assessment: The component/mixture is toxic after single contact with skin.

108-88-3:

Acute oral toxicity	LD50 (rat, male): > 5,580 mg/kg
Acute inhalation toxicity	LC50 (rat, male and female): 28.1 mg/l Exposure time: 4 h Test atmosphere: vapour Method: OECD Test Guideline 403
Acute dermal toxicity	LD50 (rabbit): > 5,000 mg/kg

67-64-1:

Acute oral toxicity	LD50 (rat): 5,800 mg/kg
Acute inhalation toxicity	LC50 (rat): 76.0 mg/l Exposure time: 4 h
Acute dermal toxicity	LD50 : > 7,426 mg/kg

64742-49-0:

Acute oral toxicity	LD50 (rat, male and female): > 5,000 mg/kg Method: OECD Test Guideline 401 GLP: yes
Acute inhalation toxicity	Remarks: No data available
Acute dermal toxicity	LD50 (rabbit, male and female): > 2,000 mg/kg Method: OECD Test Guideline 402 GLP: yes

64742-89-8:

Acute oral toxicity	LD50 (rat, male and female): > 5,000 mg/kg

	Method: OECD Test Guideline 401 GLP: yes
Acute inhalation toxicity	Remarks: No data available
Acute dermal toxicity	LD50 (rabbit, male and female): > 2,000 mg/kg Method: OECD Test Guideline 402 GLP: yes

68410-97-9:

Acute oral toxicity	LD50 (rat): > 5,000 mg/kg
Acute inhalation toxicity	Remarks: No data available
Acute dermal toxicity	LD50 (rabbit): > 2,000 mg/kg

142-82-5:

Acute oral toxicity	LD50 (rat, male and female): 5,000 mg/kg Method: OECD Test Guideline 401 Symptoms: Salivation GLP: yes Remarks: Information given is based on data obtained from similar substances.
Acute inhalation toxicity	LC50 (rat, male and female): 73.5 mg/l Exposure time: 4 h Test atmosphere: vapour Method: OECD Test Guideline 403
Acute dermal toxicity	LD50 (rabbit, male and female): > 2,000 mg/kg Method: OECD Test Guideline 402 GLP: yes Remarks: Information given is based on data obtained from similar substances.

Skin corrosion/irritation

Product:

Remarks: Irritating to skin.

Components:

67-56-1:
Species: rabbit
Result: No skin irritation

108-88-3:
Species: rabbit
Exposure time: 4 h
Result: Irritating to skin.

67-64-1:
Species: rabbit
Exposure time: 24 h
Method: In vivo
Result: Mild skin irritation

64742-49-0:
Species: rabbit
Result: Irritating to skin.

64742-89-8:
Species: rabbit
Exposure time: 4 h
Result: Irritating to skin.

68410-97-9:
Species: rabbit
Result: Irritating to skin.

142-82-5:
Species: rabbit
Exposure time: 24 h
Method: OECD Test Guideline 404
Result: Irritating to skin.
GLP: yes
Remarks: Based on a similar product formulation.

Serious eye damage/eye irritation

Product:
Remarks: Irritating to eyes.

Components:
67-56-1:
Species: rabbit
Result: No eye irritation

108-88-3:
Species: rabbit
Result: Irritating to eyes.
Method: OECD Test Guideline 405

67-64-1:
Species: rabbit
Result: Irritating to eyes.
Exposure time: 24 h

64742-49-0:
Species: rabbit

Result: Irritating to eyes.

64742-89-8:
Species: rabbit
Result: Irritating to eyes.

68410-97-9:
Species: rabbit
Result: Irritating to eyes.

142-82-5:
Species: rabbit
Result: Irritating to eyes.
Method: OECD Test Guideline 405
GLP: yes
Remarks: Information given is based on data obtained from similar substances.

Respiratory or skin sensitisation

Components:

67-56-1:
Test Type: Maximisation Test (GPMT)
Species: guinea pig
Method: OECD Test Guideline 406
Result: Did not cause sensitisation on laboratory animals.

108-88-3:
Test Type: Maximisation Test (GPMT)
Species: guinea pig
Result: Did not cause sensitisation on laboratory animals.
GLP: yes

67-64-1:
Test Type: Maximization test
Species: guinea pig
Result: Did not cause sensitisation on laboratory animals.

64742-49-0:
Test Type: Buehler Test
Species: guinea pig
Result: Did not cause sensitisation on laboratory animals.

64742-89-8:
Test Type: Buehler Test
Species: guinea pig
Result: Did not cause sensitisation on laboratory animals.

142-82-5:
Test Type: Maximization test
Species: guinea pig

Method: OECD Test Guideline 406
Result: Does not cause skin sensitisation.
Remarks: Based on a similar product formulation.

Germ cell mutagenicity

Components:

67-56-1:

Genotoxicity in vitro	Test Type: DNA damage and/or repair Metabolic activation: with and without metabolic activation Result: Ambiguous
Genotoxicity in vivo	Test Type: In vivo micronucleus test Test species: mouse (male and female) Cell type: Bone marrow Application Route: Intraperitoneal Exposure time: Single Dose: 0, 1920, 3200, 4480 mg/kg Result: negative
Germ cell mutagenicity-Assessment	Tests on bacterial or mammalian cell cultures did not show mutagenic effects.

108-88-3:

Genotoxicity in vitro	Test Type: Mammalian cell gene mutation assay Test species: Mouse lymphoma cells Metabolic activation: with and without metabolic activation Method: OECD Test Guideline 476 Result: negative
Genotoxicity in vivo	Test Type: Dominant lethal assay Test species: mouse (male) Application Route: inhalation (vapour) Exposure time: 6 h/d, 5 d/wk for 8 wks Dose: 0, 100, 400 ppm Method: OECD Test Guideline 478 Result: negative
Germ cell mutagenicity-Assessment	Tests on bacterial or mammalian cell cultures did not show mutagenic effects.

67-64-1:

Genotoxicity in vitro	Test Type: Mammalian cell gene mutation assay Test species: Mouse lymphoma cells Metabolic activation: Without metabolic activation Method: OECD Test Guideline 476 Result: negative

	Test Type: Ames test Metabolic activation: with and without metabolic activation Method: OECD Test Guideline 471 Result: negative
	Test Type: Chromosome aberration test in vitro Test species: Chinese hamster ovary (CHO) Metabolic activation: with and without metabolic activation Method: OECD Test Guideline 473 Result: negative
Genotoxicity in vivo	Test Type: In vivo micronucleus test Test species: mouse Application Route: Oral Exposure time: 13 wk Dose: 5,000, 10,000, 20,000 ppm Result: negative
Germ cell mutagenicity-Assessment	Tests on bacterial or mammalian cell cultures did not show mutagenic effects.
64742-49-0:	
Germ cell mutagenicity-Assessment	Mutagenicity classification not possible from current data
64742-89-8:	
Germ cell mutagenicity-Assessment	Mutagenicity classification not possible from current data
68410-97-9:	
Genotoxicity in vitro	Test Type: Mammalian cell gene mutation assay Test species: mouse lymphoma cells Result: positive
Genotoxicity in vivo	Test Type: In vivo micronucleus test Test species: mouse Method: OECD Test Guideline 474 Result: positive
Germ cell mutagenicity-Assessment	Positive result(s) from in vivo heritable germ cell mutagenicity tests in mammals
142-82-5:	
Genotoxicity in vitro	Test Type: Chromosome aberration test in vitro Test species: Rat liver Metabolic activation: Without metabolic activation Method: OECD Test Guideline 473 Result: negative

	Test Type: Ames test Metabolic activation: with and without metabolic activation Method: OECD Test Guideline 471 Result: negative
Germ cell mutagenicity-Assessment	Did not show mutagenic effects in animal experiments.

Carcinogenicity

Components:

67-56-1:

Carcinogenicity - Assessment	Suspected human carcinogens

108-88-3:

Species: rat, (male and female)
Application Route: inhalation (vapour)
Exposure time: 103 wks
Dose: 0, 600, 1200 ppm
Frequency of Treatment: 6.5 h/d, 5 d/wk
NOAEL: No observed adverse effect level: 1,200 ppm

Method: OECD Test Guideline 453
Result: did not display carcinogenic properties
Symptoms: Erosion of nasal epithelium
GLP: yes

Carcinogenicity - Assessment	Not classifiable as a human carcinogen.

67-64-1:

Species: mouse, (female)
Application Route: Dermal
Exposure time: 365 d (90%) or 424 d (100%)
Dose: 0.1ml 90(71mg) or 100% (79mg)
Frequency of Treatment: 3 times per wk
NOAEL: 79

Result: did not display carcinogenic properties

Carcinogenicity - Assessment	Carcinogenicity classification not possible from current data.

64742-49-0:

Carcinogenicity - Assessment	Not classifiable as a human carcinogen.

64742-89-8:

Carcinogenicity - Assessment	Not classifiable as a human carcinogen.

68410-97-9:
Species: mouse
NOAEL: 50 mg/kg bw/day

Method: OECD Test Guideline 451
Result: evidence of carcinogenic activity

Carcinogenicity - Assessment	: Possible human carcinogen

142-82-5:
Remarks: This information is not available.

Carcinogenicity - Assessment	Carcinogenicity classification not possible from current data.

Reproductive toxicity

Components:

67-56-1:

Effects on fertility	Test Type: Two-generation study Species: rat, male and female Application Route: Inhalation Dose: 0, 0.013, 0.13, 1.3 mg/L Duration of Single Treatment: 20 h General Toxicity - Parent: NOAEC: 1.3 mg/l General Toxicity F1: NOAEC: 0.13 mg/l Fertility: NOAEC: 1.3 mg/l Symptoms: Effects on postnatal development. Result: Animal testing did not show any effects on fertility.
Effects on foetal development	Species: rat Application Route: inhalation (vapour) Dose: 0, 6.65, 13.3, 26.6 mg/L Duration of Single Treatment: 20 d Frequency of Treatment: 7 hr/day General Toxicity Maternal: NOAEC: 13.3 mg/L Teratogenicity: NOAEC: 6.65 mg/L Result: Teratogenic effects.
Reproductive toxicity - Assessment	Some evidence of adverse effects on sexual function and fertility, and/or on development, based on animal experiments.

108-88-3:

Effects on fertility	Test Type: Two-generation study Species: rat, male and female Application Route: Inhalation Dose: 0, 100, 500, 2000 ppm Frequency of Treatment: 7 days/week General Toxicity - Parent: NOAEC: 500 ppm General Toxicity F1: NOAEC: 500 ppm Fertility: NOAEC: 2,000 ppm Symptoms: Reduced maternal body weight gain. Reduced offspring weight gain. Method: OECD Test Guideline 416 Result: Animal testing did not show any effects on fertility. GLP: yes Test Type: Fertility Species: rat, male and female Application Route: inhalation (vapour) Dose: 0, 600, 1200 ppm Frequency of Treatment: 7 days/week General Toxicity - Parent: NOAEC: 600 ppm Symptoms: Decreased sperm count Result: Animal testing did not show any effects on fertility.
Effects on foetal development	Species: rat Application Route: inhalation (vapour) Dose: 0, 250, 750, 1500, 3000 ppm Duration of Single Treatment: 10 d Frequency of Treatment: 6 hr/day General Toxicity Maternal: NOAEC: 750 ppm Developmental Toxicity: NOAEC: 750 ppm Symptoms: Maternal toxicity, Reduced body weight, Skeletal malformations. GLP: yes
Reproductive toxicity - Assessment	Some evidence of adverse effects on sexual function and fertility, and/or on development, based on animal experiments.
67-64-1:	
Effects on fertility	Species: rat, male Application Route: oral Dose: 0, 5000, 10000 mg/L Frequency of Treatment: 7 days/week General Toxicity - Parent: LOAEL: 10,000 Fertility: 10,000
Effects on foetal development	Species: rat Application Route: Inhalation

	Dose: 0, 440, 2200, 11000 ppm Frequency of Treatment: 7 days/week General Toxicity Maternal: NOAEC: 2,200 ppm Teratogenicity: NOAEC: 11,000 ppm Embryo-foetal toxicity.: NOAEC: 2,200 ppm Method: OECD Test Guideline 414 Result: No teratogenic potential. GLP: No data available
Reproductive toxicity - Assessment	No evidence of adverse effects on sexual function and fertility, and on development, based on animal experiments.
64742-49-0:	
Reproductive toxicity - Assessment	Fertility classification not possible from current data. Embryotoxicity classification not possible from current data.
64742-89-8:	
Reproductive toxicity - Assessment	Fertility classification not possible from current data. Embryotoxicity classification not possible from current data.
68410-97-9:	
Reproductive toxicity - Assessment	Fertility classification not possible from current data. Embryotoxicity classification not possible from current data.
142-82-5:	
Effects on fertility	Test Type: Two-generation study Species: rat, male and female Application Route: vapour Dose: 0, 900, 3000, 9000 ppm Frequency of Treatment: 5 days/week General Toxicity - Parent: NOAEC: 3,000 ppm General Toxicity F1: NOAEC: 3,000 ppm Fertility: NOAEC: 9,000 ppm Symptoms: Reduced maternal body weight gain. Reduced offspring weight gain. Method: OECD Test Guideline 416 Result: No reproductive effects. GLP: yes Remarks: Information given is based on data obtained from similar substances.
Effects on foetal development	Species: mouse Application Route: inhalation (vapour) Dose: 0, 900, 3000, 9000 ppm Duration of Single Treatment: 10 d Frequency of Treatment: 6 hr/day

	General Toxicity Maternal: NOAEC: 900 ppm Developmental Toxicity: NOAEC: 3,000 ppm Symptoms: Skeletal malformations. Method: OECD Test Guideline 414 GLP: yes Remarks: Information given is based on data obtained from similar substances.
Reproductive toxicity - Assessment	Animal testing did not show any effects on fertility. Embryotoxicity classification not possible from current data.

STOT - single exposure

Product: No data available

Components:

67-56-1:

Exposure routes:	Target Organs:	Assessment:	Remarks:
	Eyes, Central nervous system	Causes damage to organs., The substance or mixture is classified as specific target organ toxicant, single exposure, category 1.	

108-88-3:

Exposure routes:	Target Organs:	Assessment:	Remarks:
Inhalation	Central nervous system	May cause drowsiness or dizziness., The substance or mixture is classified as specific target organ toxicant, single exposure, category 3 with narcotic effects.	

67-64-1:

Exposure routes:	Target Organs:	Assessment:	Remarks:
Inhalation	Central nervous system	May cause drowsiness or dizziness., The substance or mixture is classified as specific target organ toxicant, single exposure, category 3 with narcotic	

	effects.

64742-49-0:

Exposure routes:	Target Organs:	Assessment:	Remarks:
Inhalation	Central nervous system	May cause drowsiness or dizziness., The substance or mixture is classified as specific target organ toxicant, single exposure, category 3 with narcotic effects.	

64742-89-8:No data available

68410-97-9:

Exposure routes:	Target Organs:	Assessment:	Remarks:
Inhalation	Central nervous system	May cause drowsiness or dizziness., The substance or mixture is classified as specific target organ toxicant, single exposure, category 3 with narcotic effects.	

142-82-5:

Exposure routes:	Target Organs:	Assessment:	Remarks:
Inhalation	Central nervous system	May cause drowsiness or dizziness., The substance or mixture is classified as specific target organ toxicant, single exposure, category 3 with narcotic effects.	

STOT - repeated exposure

Product: No data available

Components:

67-56-1: No data available

108-88-3:

Exposure routes:	Target Organs:	Assessment:	Remarks:
Inhalation	Auditory system, Eyes	May cause damage to organs through prolonged or repeated exposure., The substance or mixture is classified as specific target organ toxicant, repeated exposure, category 2.	

67-64-1: No data available

64742-49-0: No data available

64742-89-8: No data available

68410-97-9: No data available

142-82-5: No data available

Repeated dose toxicity

Components:

67-56-1:
Species: mouse, male and female
NOAEL: 1.3 mg/l
Application Route: Inhalation
Exposure time: 12 mths
Number of exposures: Continuous
Dose: 0, 0.013, 0.13, 1.3 mg/L

108-88-3:
Species: rat, male and female
NOAEL: 300
Application Route: inhalation (vapour)
Exposure time: 6, 12, or 18 mths
Number of exposures: 6 h/d, 5 d/wk

Dose: 0, 30, 100, 300 ppm
Method: OECD Test Guideline 453

Repeated dose toxicity - Assessment : Causes skin irritation.

67-64-1:
Species: mouse, male
NOAEL: 20000
Application Route: Oral
Exposure time: 13 wk
Number of exposures: daily
Dose: 1250, 2500, 5000, 10000, 20000
Method: OECD Test Guideline 408
GLP: No data available

Species: mouse, female
NOAEL: 20000
LOAEL: 50000
Application Route: Oral
Exposure time: 13 wk
Number of exposures: daily
Dose: 2500, 5000, 10000, 20000, 5000
Method: OECD Test Guideline 408
GLP: No data available

Repeated dose toxicity - Assessment Causes mild skin irritation., Causes serious eye irritation.

64742-89-8:
Species: rat, male and female
NOAEL: 1402
Application Route: inhalation (vapour)
Test atmosphere: vapour
Exposure time: 13 weeks
Number of exposures: 6 hours/day, 5 days/week
Dose: 322, 1402, 9869 mg/m3
GLP: yes
Target Organs: Kidney
Symptoms: Nasal and ocular discharge

142-82-5:
Species: rat, male
NOAEL: 12470 mg/m3
Application Route: inhalation (vapour)
Exposure time: 16 wks
Number of exposures: 12 h/d, 7 d/wk
Dose: 0, 12470 mg/3

Repeated dose toxicity - Causes skin irritation.

Assessment

Aspiration toxicity

Components:

108-88-3:
Aspiration Toxicity - Category 1

64742-49-0:
May be fatal if swallowed and enters airways.

64742-89-8:
May be fatal if swallowed and enters airways.

68410-97-9:
May be fatal if swallowed and enters airways.

142-82-5:
Aspiration Toxicity - Category 1

Further information

Product:
Remarks: Symptoms of overexposure may be headache, dizziness, tiredness, nausea and vomiting., Concentrations substantially above the TLV value may cause narcotic effects., Solvents may degrease the skin.

SECTION 12. ECOLOGICAL INFORMATION

Ecotoxicity

Components:

67-56-1:

Toxicity to fish	LC50 (Lepomis macrochirus (Bluegill sunfish)): 15,400 mg/l Exposure time: 96 h Test Type: flow-through test
Toxicity to daphnia and other aquatic invertebrates	EC50 (Daphnia magna (Water flea)): > 10,000 mg/l Exposure time: 48 h Test Type: static test
Toxicity to algae	EC50 (Scenedesmus capricornutum (fresh water algae)): 22,000 mg/l End point: Growth rate Exposure time: 96 h

	Test Type: static test Method: OECD Test Guideline 201
Toxicity to bacteria	IC50 (activated sludge): > 1,000 mg/l End point: Growth rate Exposure time: 3 h Test Type: Static Method: OECD Test Guideline 209
108-88-3:	
Toxicity to fish	LC50 (Oncorhynchus mykiss (rainbow trout)): 5.5 mg/l Exposure time: 96 h Test Type: flow-through test
Toxicity to daphnia and other aquatic invertebrates	EC50 (Ceriodaphnia dubia): 3.78 mg/l Exposure time: 48 h Test Type: Renewal
Toxicity to algae	EC50 (Chlorella vulgaris (Fresh water algae)): 134 mg/l Exposure time: 3 h Test Type: static test
Toxicity to bacteria	IC50 (Bacteria): 84 mg/l Exposure time: 24 h Test Type: Static
Ecotoxicology Assessment Acute aquatic toxicity	Toxic to aquatic life.
Chronic aquatic toxicity	Toxic to aquatic life with long lasting effects.
67-64-1:	
Toxicity to fish	LC50 (Oncorhynchus mykiss (rainbow trout)): 6,100 mg/l Exposure time: 48 h
Toxicity to daphnia and other aquatic invertebrates	EC50 (Daphnia magna (Water flea)): 7,630 mg/l Exposure time: 48 h Test substance: Acetone
Toxicity to algae	Remarks: No data available
64742-49-0:	
Toxicity to fish	LC50 (Oncorhynchus mykiss (rainbow trout)): 10 mg/l Exposure time: 96 h
Toxicity to daphnia and other aquatic inverte-	EC50 (Daphnia magna (Water flea)): 4.5 mg/l Exposure time: 48 h

brates	
Toxicity to algae	EC50 (Pseudokirchneriella subcapitata (green algae)): 3.71 mg/l Exposure time: 96 h
Ecotoxicology Assessment Acute aquatic toxicity	Toxic to aquatic life.
Chronic aquatic toxicity	Toxic to aquatic life with long lasting effects.
64742-89-8:	
Toxicity to fish	LC50 (Oncorhynchus mykiss (rainbow trout)): 8.2 mg/l Exposure time: 96 h Test Type: semi-static test
Toxicity to daphnia and other aquatic inverte-brates	EC50 (Daphnia magna (Water flea)): 4.5 mg/l Exposure time: 48 h Test Type: Immobilization Analytical monitoring: yes
Toxicity to algae	EC50 (Pseudokirchneriella subcapitata (green algae)): 3.7 mg/l Exposure time: 96 h Test Type: static test
Ecotoxicology Assessment Acute aquatic toxicity	Toxic to aquatic life.
Chronic aquatic toxicity	Toxic to aquatic life with long lasting effects.
68410-97-9:	
Toxicity to fish	LC50 (Pimephales promelas (fathead minnow)): 8.2 mg/l Exposure time: 96 h
Toxicity to daphnia and other aquatic inverte-brates	EC50 (Daphnia magna (Water flea)): 4.5 mg/l Exposure time: 48 h
Toxicity to algae	EC50 (Pseudokirchneriella subcapitata (green algae)): 3.1 mg/l Exposure time: 72 h Method: OECD Test Guideline 201
Ecotoxicology Assessment Acute aquatic toxicity	Toxic to aquatic life.
Chronic aquatic toxicity	Toxic to aquatic life with long lasting effects.

142-82-5:

Toxicity to fish	LC50 (Carassius auratus (goldfish)): 4 mg/l Exposure time: 24 h Remarks: Very toxic to aquatic organisms, may cause long-term adverse effects in the aquatic environment.
Toxicity to daphnia and other aquatic invertebrates	EC50 (Daphnia magna (Water flea)): 1.5 mg/l Exposure time: 48 h Test Type: static test Remarks: Very toxic to aquatic organisms.
Toxicity to algae	Remarks: No data available
Ecotoxicology Assessment Acute aquatic toxicity	Very toxic to aquatic life.
Chronic aquatic toxicity	Very toxic to aquatic life with long lasting effects.

Persistence and degradability

Components:

67-56-1:

Biodegradability	aerobic Result: Readily biodegradable. Biodegradation: 72 % Remarks: Readily biodegradable
Biochemical Oxygen Demand (BOD)	600 - 1,120 mg/g
Chemical Oxygen Demand (COD)	1,420 mg/g
BOD/COD	BOD: 600 - 1120COD: 1420
Stability in water	Hydrolysis: 91 % at19 °C(72 h) Remarks: Hydrolyses on contact with water. Hydrolyses readily.

108-88-3:

Biodegradability	Inoculum: Sewage Biodegradation: 100 % Remarks: Readily biodegradable

67-64-1:

Biodegradability	Remarks: Readily biodegradable

64742-49-0:

Biodegradability	aerobic Inoculum: activated sludge Concentration: 20 mg/l Biodegradation: 74.30 % Exposure time: 56 d GLP: yes Remarks: Inherently biodegradable.

64742-89-8:

Biodegradability	Concentration: 49.2 mg/l Result: Readily biodegradable. Biodegradation: 77 % Testing period: 2 d Exposure time: 28 d GLP: yes

142-82-5:

Biodegradability	Primary biodegradation Inoculum: activated sludge Concentration: 100 mg/l Biodegradation: 100 % Testing period: 2 d Exposure time: 25 d Remarks: Readily biodegradable

Bioaccumulative potential

Components:

67-56-1:

Bioaccumulation	Species: Cyprinus carpio (Carp) Bioconcentration factor (BCF): 1.0 Exposure time: 72 d Temperature: 20 °C Concentration: 5 mg/l Remarks: This substance is not considered to be very persistent nor very bioaccumulating (vPvB).
Partition coefficient: n-octanol/water	log Pow: -0.77

108-88-3:

Partition coefficient: n-octanol/water	log Pow: 2.73

67-64-1:

Partition coefficient: n-octanol/water	log Pow: -0.24

64742-49-0:

Partition coefficient: n-octanol/water	Remarks: No data available
64742-89-8: Partition coefficient: n-octanol/water	log Pow: 2.13 - 4.85 (25 °C)

Mobility in soil

No data available

Other adverse effects

No data available

Product:

Regulation	40 CFR Protection of Environment; Part 82 Protection of Stratospheric Ozone - CAA Section 602 Class I Substances
Remarks	This product neither contains, nor was manufactured with a Class I or Class II ODS as defined by the U.S. Clean Air Act Section 602 (40 CFR 82, Subpt. A, App.A + B).
Additional ecological information	An environmental hazard cannot be excluded in the event of unprofessional handling or disposal., Toxic to aquatic life with long lasting effects.

SECTION 13. DISPOSAL CONSIDERATIONS

Disposal methods

Waste from residues	Dispose of in accordance with all applicable local, state and federal regulations.
Contaminated packaging	Empty remaining contents. Dispose of as unused product. Do not re-use empty containers. Do not burn, or use a cutting torch on, the empty drum.

SECTION 14. TRANSPORT INFORMATION

IATA (International Air Transport Association): UN1263, PAINT RELATED MATERIAL, 3, II, Flash Point:-20.00 °C(-4.00 °F)

IMDG (International Maritime Dangerous Goods): UN1263, PAINT RELATED MATERIAL, 3, II

DOT (Department of Transportation): UN1263, PAINT RELATED MATERIAL, 3, II

SECTION 15. REGULATORY INFORMATION

OSHA Hazards Flammable liquid, Carcinogen, Toxic by ingestion, Toxic by skin absorption, Moderate skin irritant, Moderate eye irritant, Teratogen, Reproductive hazard, Mutagen

WHMIS Classification B2: Flammable liquid
D1B: Toxic Material Causing Immediate and Serious Toxic Effects
D2A: Very Toxic Material Causing Other Toxic Effects
D2B: Toxic Material Causing Other Toxic Effects

EPCRA - Emergency Planning and Community Right-to-Know Act

CERCLA Reportable Quantity

Components	CAS-No.	Component RQ (lbs)	Calculated product RQ (lbs)
Toluene	108-88-3	1000	2856

SARA 304 Extremely Hazardous Substances Reportable Quantity

This material does not contain any components with a section 304 EHS RQ.

SARA 311/312 Hazards Fire Hazard
Chronic Health Hazard
Acute Health Hazard

Clean Air Act

The following chemical(s) are listed as HAP under the U.S. Clean Air Act, Section 12 (40 CFR 61):

67-56-1	Methanol	40.0009 %
108-88-3	Toluene	35.01 %
71-43-2	Benzene	0.0457 %
100-41-4	Ethylbenzene	0.0449 %
110-54-3	Hexane	0.002 %
91-20-3	Naphthalene	0.0002 %
98-82-8	Cumene	0.0001 %

This product does not contain any chemicals listed under the U.S. Clean Air Act Section 112(r) for Accidental Release Prevention (40 CFR 68.130, Subpart F).
The following chemical(s) are listed under the U.S. Clean Air Act Section 111 SOCMI Intermediate or Final VOC's (40 CFR 60.489):

67-56-1	Methanol	40.0009 %
108-88-3	Toluene	35.01 %
67-64-1	Acetone	15 %
110-82-7	Cyclohexane	0.25 %
71-43-2	Benzene	0.0457 %
100-41-4	Ethylbenzene	0.0449 %
1330-20-7	Mixed xylenes	0.013 %
98-82-8	Cumene	0.0001 %

Clean Water Act

The following Hazardous Substances are listed under the U.S. CleanWater Act, Section 311, Table 116.4A:

108-88-3	Toluene	35.01 %
110-82-7	Cyclohexane	0.25 %
71-43-2	Benzene	0.0457 %
100-41-4	Ethylbenzene	0.0449 %
1330-20-7	Mixed xylenes	0.013 %
91-20-3	Naphthalene	0.0002 %

The following Hazardous Chemicals are listed under the U.S. CleanWater Act, Section 311, Table 117.3:

108-88-3	Toluene	35.01 %
110-82-7	Cyclohexane	0.25 %
71-43-2	Benzene	0.0457 %
100-41-4	Ethylbenzene	0.0449 %
1330-20-7	Mixed xylenes	0.013 %
91-20-3	Naphthalene	0.0002 %

This product contains the following toxic pollutants listed under the U.S. Clean Water Act Section 307

108-88-3	Toluene	35.01 %

US State Regulations

Massachusetts Right To Know

67-56-1	Methanol	30 - 50 %
108-88-3	Toluene	30 - 50 %
67-64-1	Acetone	10 - 20 %
71-43-2	Benzene	0 - 0.1 %

Pennsylvania Right To Know

67-56-1	Methanol	30 - 50 %
108-88-3	Toluene	30 - 50 %
67-64-1	Acetone	10 - 20 %
64742-49-0	Naphtha (pet), hydrotreated lt	0 - 20 %
64742-89-8	Solvent naphtha (pet), lt aliph.	0 - 20 %
68410-97-9	Distillates, pet, lt dist hydrotreat process, low-boil	0 - 20 %
110-82-7	Cyclohexane	0.1 - 1 %
71-43-2	Benzene	0 - 0.1 %
100-41-4	Ethylbenzene	0 - 0.1 %
1330-20-7	Mixed xylenes	0 - 0.1 %

New Jersey Right To Know

67-56-1	Methanol	30 - 50 %
108-88-3	Toluene	30 - 50 %
67-64-1	Acetone	10 - 20 %
64742-49-0	Naphtha (pet), hydrotreated lt	0 - 20 %
64742-89-8	Solvent naphtha (pet), lt aliph.	0 - 20 %
68410-97-9	Distillates, pet, lt dist hydrotreat process, low-boil	0 - 20 %

California Prop 65

WARNING! This product contains a chemical known to the State of California to cause cancer.

71-43-2	Benzene
100-41-4	Ethylbenzene
91-20-3	Naphthalene
98-82-8	Cumene

WARNING: This product contains a chemical known to the State of California to cause birth defects or other reproductive harm.

67-56-1	Methanol
108-88-3	Toluene
71-43-2	Benzene

The components of this product are reported in the following inventories:

Switzerland. New notified substances and declared preparations		y (positive listing) (The formulation contains substances listed on the Swiss Inventory)
United States TSCA Inventory		y (positive listing) (On TSCA Inventory)
Canadian Domestic Substances List (DSL)		y (positive listing) (All components of this product are on the Canadian DSL.)
Australia Inventory of Chemical Substances (AICS)		y (positive listing) (On the inventory, or in compliance with the inventory)
New Zealand. Inventory of Chemical Substances		n (Negative listing) (Not in compliance with the inventory)
Japan. ENCS - Existing and New Chemical		n (Negative listing)

Substances Inventory		(Not in compliance with the inventory)
Japan. ISHL - Inventory of Chemical Substances (METI)		n (Negative listing) (Not in compliance with the inventory)
Korea. Korean Existing Chemicals Inventory (KECI)		y (positive listing) (On the inventory, or in compliance with the inventory)
Philippines Inventory of Chemicals and Chemical Substances (PICCS)		y (positive listing) (On the inventory, or in compliance with the inventory)
China. Inventory of Existing Chemical Substances in China (IECSC)		y (positive listing) (On the inventory, or in compliance with the inventory)

SECTION 16. OTHER INFORMATION

Version 2.0
Revision Date 12/07/2016

NFPA:

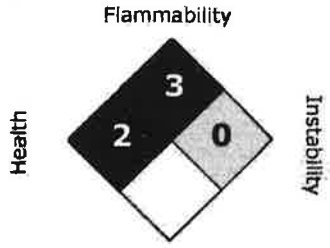

Special hazard.

HMIS III:

HEALTH	2*
FLAMMABILITY	3
PHYSICAL HAZARD	0

0 = not significant, 1 =Slight,
2 = Moderate, 3 = High
4 =Extreme, * = Chronic

The information accumulated is based on the data of which we are aware and is believed to be correct as of the date hereof. Since this information may be applied under conditions beyond our control and with which we may be unfamiliar and since data made become available subsequently to the date hereof, we do not assume any responsibility for the results of its use. Recipients are advised to confirm in advance of need that the information is current, applicable, and suitable to their circumstances.

Safety Data Sheet

Legecy MSDS: 000000148128

Material number:
707948, 707692

Key or legend to abbreviations and acronyms used in the safety data sheet			
ACGIH	American Conference of Government Industrial Hygienists	LD50	Lethal Dose 50%
AICS	Australia, Inventory of Chemical Substances	LOAEL	Lowest Observed Adverse Effect Level
DSL	Canada, Domestic Substances List	NFPA	National Fire Protection Agency
NDSL	Canada, Non-Domestic Substances List	NIOSH	National Institute for Occupational Safety & Health
CNS	Central Nervous System	NTP	National Toxicology Program
CAS	Chemical Abstract Service	NZIoC	New Zealand Inventory of Chemicals
EC50	Effective Concentration	NOAEL	No Observable Adverse Effect Level
EC50	Effective Concentration 50%	NOEC	No Observed Effect Concentration
EGEST	EOSCA Generic Exposure Scenario Tool	OSHA	Occupational Safety & Health Administration
EOSCA	European Oilfield Specialty Chemicals Association	PEL	Permissible Exposure Limit
EINECS	European Inventory of Existing Chemical Substances	PICCS	Philipines Inventory of Commercial Chemical Substances
MAK	Germany Maximum Concentration Values	PRNT	Presumed Not Toxic
GHS	Globally Harmonized System	RCRA	Resource Conservation Recovery Act
>=	Greater Than or Equal To	STEL	Short-term Exposure Limit
IC50	Inhibition Concentration 50%	SARA	Superfund Amendments and Reauthorization Act.
IARC	International Agency for Research on Cancer	TLV	Threshold Limit Value
IECSC	Inventory of Existing Chemical Substances in China	TWA	Time Weighted Average
ENCS	Japan, Inventory of Existing and New Chemical Substances	TSCA	Toxic Substance Control Act
KECI	Korea, Existing Chemical Inventory	UVCB	Unknown or Variable Compositon, Complex Reaction Products, and Biological Materials
<=	Less Than or Equal To	WHMIS	Workplace Hazardous Materials Information System
LC50		Lethal Concentration 50%	

Safety Data Sheet
acc. to OSHA HCS

Printing date 03/14/2018

Reviewed on 06/21/2017

1 Identification

· **Product identifier**

· **Trade name:** **HR010 Hot Rod Black Kit with HR014,HRC06 & HRR06**

· **Article number:** HR010 Kit
· **Application of the substance / the mixture** Coating

· **Details of the supplier of the safety data sheet**
· **Manufacturer/Supplier:**
SEM Products Inc.
1685 Overview Drive
Rock Hill, SC 29730
803 207 8225

· **Information department:**
cust_care@semproducts.com : SEM Products,Inc. 1685 Overview Dr. Rock Hill, SC 29730 : phone 1-800-831-1122, M - TH 7am - 4pm EDT
· **Emergency telephone number:** CHEMTREC 1-800-424-9300

*

2 Hazard(s) identification

· **Classification of the substance or mixture**

GHS02 Flame

Flam. Liq. 2 H225 Highly flammable liquid and vapor.

GHS08 Health hazard

Resp. Sens. 1 H334 May cause allergy or asthma symptoms or breathing difficulties if inhaled.
STOT SE 2 H371 May cause damage to organs.

GHS07

Skin Irrit. 2 H315 Causes skin irritation.
Eye Irrit. 2A H319 Causes serious eye irritation.
Skin Sens. 1 H317 May cause an allergic skin reaction.
STOT SE 3 H336 May cause drowsiness or dizziness.

· **Label elements**
· **GHS label elements** The product is classified and labeled according to the Globally Harmonized System (GHS).
· **Hazard pictograms**

GHS02 GHS08 GHS07

· **Signal word** Danger

· **Hazard-determining components of labeling:**
HDI Prepolymer

(Contd. on page 2)

Safety Data Sheet
acc. to OSHA HCS

Printing date 03/14/2018 Reviewed on 06/21/2017

Trade name: HR010 Hot Rod Black Kit with HR014,HRC06 & HRR06

(Contd. of page 1)

n-butyl acetate
acetone
precipitated Silica (Silica-Amorphous)
bis(1,2,2,6,6-Pentamethyl-4-piperidinyl) sebacate

· **Hazard statements**
H225 Highly flammable liquid and vapor.
H315 Causes skin irritation.
H319 Causes serious eye irritation.
H334 May cause allergy or asthma symptoms or breathing difficulties if inhaled.
H317 May cause an allergic skin reaction.
H371 May cause damage to organs.
H336 May cause drowsiness or dizziness.

· **Precautionary statements**

P210	Keep away from heat/sparks/open flames/hot surfaces. - No smoking.
P233	Keep container tightly closed.
P240	Ground/bond container and receiving equipment.
P241	Use explosion-proof electrical/ventilating/lighting/equipment.
P242	Use only non-sparking tools.
P243	Take precautionary measures against static discharge.
P260	Do not breathe dust/fume/gas/mist/vapors/spray.
P264	Wash thoroughly after handling.
P270	Do not eat, drink or smoke when using this product.
P272	Contaminated work clothing must not be allowed out of the workplace.
P280	Wear protective gloves/protective clothing/eye protection/face protection.
P284	[In case of inadequate ventilation] wear respiratory protection.
P303+P361+P353	If on skin (or hair): Take off immediately all contaminated clothing. Rinse skin with water/ shower.
P304+P341	If inhaled: If breathing is difficult, remove person to fresh air and keep comfortable for breathing.
P305+P351+P338	If in eyes: Rinse cautiously with water for several minutes. Remove contact lenses, if present and easy to do. Continue rinsing.
P308+P311	IF exposed or concerned: Call a poison center/doctor.
P362+P364	Take off contaminated clothing and wash it before reuse.
P333+P313	If skin irritation or rash occurs: Get medical advice/attention.
P321	Specific treatment (see on this label).
P337+P313	If eye irritation persists: Get medical advice/attention.
P342+P311	If experiencing respiratory symptoms: Call a poison center/doctor.
P363	Wash contaminated clothing before reuse.
P370+P378	In case of fire: Use for extinction: CO2, powder or water spray.
P403+P235	Store in a well-ventilated place. Keep cool.
P405	Store locked up.
P501	Dispose of contents/container in accordance with local/regional/national/international regulations.

· **Classification system:**
· **NFPA ratings (scale 0 - 4)**

Health = 2
Fire = 3
Reactivity = 0

(Contd. on page 3)

Safety Data Sheet
acc. to OSHA HCS

Printing date 03/14/2018 Reviewed on 06/21/2017

Trade name: HR010 Hot Rod Black Kit with HR014,HRC06 & HRR06

(Contd. of page 2)

· **HMIS-ratings (scale 0 - 4)**

HEALTH *2	Health = *2
FIRE 3	Fire = 3
REACTIVITY 0	Reactivity = 0

· **Other hazards**
· **Results of PBT and vPvB assessment**
· **PBT:** Not applicable.
· **vPvB:** Not applicable.

* 3 Composition/information on ingredients

· **Chemical characterization: Mixtures**
· **Description:**
Mixture: consisting of the following components.
Weight percentages

· **Dangerous components:**		
123-86-4	n-butyl acetate	13-30%
67-64-1	acetone	13-30%
112-07-2	2-butoxyethyl acetate	≥7-<10%
28182-81-2	HDI Prepolymer	≥7-<10%
108-65-6	2-methoxy-1-methylethyl acetate	5-7%
112926-00-8	precipitated Silica (Silica-Amorphous)	1.5-5%
110-43-0	heptan-2-one	1.5-5%
108-83-8	2,6-dimethylheptan-4-one	1.5-5%
1330-20-7	xylene	1-1.5%
14807-96-6	Talc	1-1.5%
64742-95-6	Solvent naphtha (petroleum), light arom.	1-1.5%
19549-80-5	4,6-dimethylheptan-2-one	1-1.5%
41556-26-7	bis(1,2,2,6,6-Pentamethyl-4-piperidinyl) sebacate	≥0.1-<1%

* 4 First-aid measures

· **Description of first aid measures**
· **After inhalation:**
Supply fresh air and to be sure call for a doctor.
In case of unconsciousness place patient stably in side position for transportation.
· **After skin contact:** Immediately wash with water and soap and rinse thoroughly.
· **After eye contact:**
Rinse opened eye for several minutes under running water. If symptoms persist, consult a doctor.
· **After swallowing:** If symptoms persist consult doctor.
· **Information for doctor:**
· **Most important symptoms and effects, both acute and delayed** No further relevant information available.

(Contd. on page 4)

Safety Data Sheet
acc. to OSHA HCS

Printing date 03/14/2018 Reviewed on 06/21/2017

Trade name: HR010 Hot Rod Black Kit with HR014,HRC06 & HRR06

(Contd. of page 3)

· **Indication of any immediate medical attention and special treatment needed**
No further relevant information available.

* 5 Fire-fighting measures

· **Extinguishing media**
· **Suitable extinguishing agents:**
CO2, extinguishing powder or water spray. Fight larger fires with water spray or alcohol resistant foam.
· **For safety reasons unsuitable extinguishing agents:** Water with full jet
· **Special hazards arising from the substance or mixture** No further relevant information available.
· **Advice for firefighters**
· **Protective equipment:** No special measures required.

* 6 Accidental release measures

· **Personal precautions, protective equipment and emergency procedures**
Wear protective equipment. Keep unprotected persons away.
· **Environmental precautions:** Do not allow to enter sewers/ surface or ground water.
· **Methods and material for containment and cleaning up:**
Absorb with liquid-binding material (sand, diatomite, acid binders, universal binders, sawdust).
Dispose contaminated material as waste according to item 13.
Ensure adequate ventilation.
· **Reference to other sections**
See Section 7 for information on safe handling.
See Section 8 for information on personal protection equipment.
See Section 13 for disposal information.
· **Protective Action Criteria for Chemicals**

· PAC-1:		
123-86-4	n-butyl acetate	5 ppm
67-64-1	acetone	200 ppm
112-07-2	2-butoxyethyl acetate	15 ppm
28182-81-2	HDI Prepolymer	7.8 mg/m³
108-65-6	2-methoxy-1-methylethyl acetate	50 ppm
112926-00-8	precipitated Silica (Silica-Amorphous)	18 mg/m³
110-43-0	heptan-2-one	150 ppm
108-83-8	2,6-dimethylheptan-4-one	75 ppm
1330-20-7	xylene	130 ppm
123-42-2	4-hydroxy-4-methylpentan-2-one	150 ppm
1333-86-4	Carbon black	9 mg/m³
95-63-6	1,2,4-trimethylbenzene	140 ppm
9002-88-4	Polyethylene low density	16 mg/m³
108-67-8	mesitylene	140 ppm
25322-68-3	Polyethylene glycol	30 mg/m³
98-82-8	cumene	50 ppm
78-83-1	butanol	150 ppm

(Contd. on page 5)

Safety Data Sheet
acc. to OSHA HCS

Printing date 03/14/2018 Reviewed on 06/21/2017

Trade name: HR010 Hot Rod Black Kit with HR014,HRC06 & HRR06

(Contd. of page 4)

100-41-4	ethylbenzene	33 ppm

· **PAC-2:**

123-86-4	n-butyl acetate	200 ppm
67-64-1	acetone	3200* ppm
112-07-2	2-butoxyethyl acetate	35 ppm
28182-81-2	HDI Prepolymer	86 mg/m³
108-65-6	2-methoxy-1-methylethyl acetate	1,000 ppm
112926-00-8	precipitated Silica (Silica-Amorphous)	200 mg/m³
110-43-0	heptan-2-one	670 ppm
108-83-8	2,6-dimethylheptan-4-one	330 ppm
1330-20-7	xylene	920* ppm
123-42-2	4-hydroxy-4-methylpentan-2-one	350 ppm
1333-86-4	Carbon black	99 mg/m³
95-63-6	1,2,4-trimethylbenzene	360 ppm
9002-88-4	Polyethylene low density	170 mg/m³
108-67-8	mesitylene	360 ppm
25322-68-3	Polyethylene glycol	1,300 mg/m³
98-82-8	cumene	300 ppm
78-83-1	butanol	1,300 ppm
100-41-4	ethylbenzene	1100* ppm

· **PAC-3:**

123-86-4	n-butyl acetate	3000* ppm
67-64-1	acetone	5700* ppm
112-07-2	2-butoxyethyl acetate	210 ppm
28182-81-2	HDI Prepolymer	510 mg/m³
108-65-6	2-methoxy-1-methylethyl acetate	5000* ppm
112926-00-8	precipitated Silica (Silica-Amorphous)	1,200 mg/m³
110-43-0	heptan-2-one	4000* ppm
108-83-8	2,6-dimethylheptan-4-one	2000* ppm
1330-20-7	xylene	2500* ppm
123-42-2	4-hydroxy-4-methylpentan-2-one	2100* ppm
1333-86-4	Carbon black	590 mg/m³
95-63-6	1,2,4-trimethylbenzene	480 ppm
9002-88-4	Polyethylene low density	1,000 mg/m³
108-67-8	mesitylene	480 ppm
25322-68-3	Polyethylene glycol	7,700 mg/m³
98-82-8	cumene	730 ppm
78-83-1	butanol	8000* ppm
100-41-4	ethylbenzene	1800* ppm

USA

(Contd. on page 6)

Safety Data Sheet
acc. to OSHA HCS

Printing date 03/14/2018 Reviewed on 06/21/2017

Trade name: HR010 Hot Rod Black Kit with HR014,HRC06 & HRR06

(Contd. of page 5)

7 Handling and storage

· **Handling:**
· **Precautions for safe handling**
No special measures required.
Ensure good ventilation/exhaustion at the workplace.
· **Information about protection against explosions and fires:**
Keep ignition sources away - Do not smoke.
Protect against electrostatic charges.

· **Conditions for safe storage, including any incompatibilities**
· **Storage:**
· **Requirements to be met by storerooms and receptacles:** Store in a cool location.
· **Information about storage in one common storage facility:** Not required.
· **Further information about storage conditions:**
Keep receptacle tightly sealed.
Store in cool, dry conditions in well sealed receptacles.
· **Specific end use(s)** No further relevant information available.

*

8 Exposure controls/personal protection

· **Additional information about design of technical systems:** No further data; see item 7.

· **Control parameters**
· **Components with limit values that require monitoring at the workplace:**
The following constituents are the only constituents of the product which have a PEL, TLV or other recommended exposure limit.
At this time, the other constituents have no known exposure limits.

123-86-4 n-butyl acetate	
PEL	Long-term value: 710 mg/m³, 150 ppm
REL	Long-term value: 950 mg/m³, 200 ppm
TLV	Short-term value: 712 mg/m³, 150 ppm Long-term value: 238 mg/m³, 50 ppm
67-64-1 acetone	
PEL	Long-term value: 2400 mg/m³, 1000 ppm
REL	Long-term value: 590 mg/m³, 250 ppm
TLV	Short-term value: 1187 mg/m³, 500 ppm Long-term value: 594 mg/m³, 250 ppm BEI
112-07-2 2-butoxyethyl acetate	
REL	Long-term value: 33 mg/m³, 5 ppm
TLV	Long-term value: 130 mg/m³, 20 ppm
108-65-6 2-methoxy-1-methylethyl acetate	
WEEL	Long-term value: 50 ppm
112926-00-8 precipitated Silica (Silica-Amorphous)	
PEL	20mppcf or 80mg/m3 /%SiO2
REL	Long-term value: 6 mg/m³ See Pocket Guide App. C

(Contd. on page 7)

Safety Data Sheet
acc. to OSHA HCS

Printing date 03/14/2018 Reviewed on 06/21/2017

Trade name: HR010 Hot Rod Black Kit with HR014,HRC06 & HRR06

(Contd. of page 6)

TLV	TLV withdrawn
110-43-0 heptan-2-one	
PEL	Long-term value: 465 mg/m³, 100 ppm
REL	Long-term value: 465 mg/m³, 100 ppm
TLV	Long-term value: 233 mg/m³, 50 ppm
108-83-8 2,6-dimethylheptan-4-one	
PEL	Long-term value: 290 mg/m³, 50 ppm
REL	Long-term value: 150 mg/m³, 25 ppm
TLV	Long-term value: 145 mg/m³, 25 ppm
1330-20-7 xylene	
PEL	Long-term value: 435 mg/m³, 100 ppm
REL	Short-term value: 655 mg/m³, 150 ppm Long-term value: 435 mg/m³, 100 ppm
TLV	Short-term value: 651 mg/m³, 150 ppm Long-term value: 434 mg/m³, 100 ppm BEI

· **Ingredients with biological limit values:**	
67-64-1 acetone	
BEI	50 mg/L Medium: urine Time: end of shift Parameter: Acetone (nonspecific)
1330-20-7 xylene	
BEI	1.5 g/g creatinine Medium: urine Time: end of shift Parameter: Methylhippuric acids

· **Additional information:** The lists that were valid during the creation were used as basis.

· **Exposure controls**
· **Personal protective equipment:**
· **General protective and hygienic measures:**
Keep away from foodstuffs, beverages and feed.
Immediately remove all soiled and contaminated clothing.
Wash hands before breaks and at the end of work.
Avoid contact with the eyes and skin.
· **Breathing equipment:**
In case of brief exposure or low pollution use respiratory filter device. In case of intensive or longer exposure use respiratory protective device that is independent of circulating air.
· **Protection of hands:**
Due to missing tests no recommendation to the glove material can be given for the product/ the preparation/ the chemical mixture.
Selection of the glove material on consideration of the penetration times, rates of diffusion and the degradation

Protective gloves

The glove material has to be impermeable and resistant to the product/ the substance/ the preparation.

(Contd. on page 8)

(Contd. of page 7)

· ***Material of gloves***
The selection of the suitable gloves does not only depend on the material, but also on further marks of quality and varies from manufacturer to manufacturer. As the product is a preparation of several substances, the resistance of the glove material can not be calculated in advance and has therefore to be checked prior to the application.

· ***Penetration time of glove material***
The exact break trough time has to be found out by the manufacturer of the protective gloves and has to be observed.

· ***Eye protection:***

Tightly sealed goggles

*

9 Physical and chemical properties

· ***Information on basic physical and chemical properties***	
· ***General Information***	
· ***Appearance:***	
Form:	*Liquid*
Color:	*According to product specification*
· ***Odor:***	*Characteristic*
· ***Odor threshold:***	*Not determined.*
· ***pH-value:***	*Not determined.*
· ***Change in condition***	
Melting point/Melting range:	*Undetermined.*
Boiling point/Boiling range:	*55 °C*
· ***Flash point:***	*-18 °C*
· ***Flammability (solid, gaseous):***	*Not applicable.*
· ***Ignition temperature:***	*280 °C*
· ***Decomposition temperature:***	*Not determined.*
· ***Auto igniting:***	*Product is not selfigniting.*
· ***Danger of explosion:***	*In use, may form flammable/explosive vapour-air mixture.*
· ***Explosion limits:***	
Lower:	*1.2 Vol %*
Upper:	*13 Vol %*
· ***Vapor pressure at 20 °C:***	*233 hPa*
· ***Density at 20 °C:***	*0.97 g/cm³*
· ***Relative density***	*Not determined.*
· ***Vapor density***	*Not determined.*
· ***Evaporation rate***	*Not determined.*
· ***Solubility in / Miscibility with***	
Water:	*Not miscible or difficult to mix.*
· ***Partition coefficient (n-octanol/water):***	*Not determined.*

(Contd. on page 9)

Safety Data Sheet
acc. to OSHA HCS

Printing date 03/14/2018 Reviewed on 06/21/2017

Trade name: HR010 Hot Rod Black Kit with HR014,HRC06 & HRR06

(Contd. of page 8)

· **Viscosity:**	
Dynamic:	Not determined.
Kinematic:	Not determined.
· **Solvent content:**	
Organic solvents:	61.8 %
VOC content:	43.78 %
	545.2 g/l / 4.55 lb/gl
Solids content:	45.5 %
· **Other information**	No further relevant information available.

*

10 Stability and reactivity

· **Reactivity** No further relevant information available.
· **Chemical stability**
· **Thermal decomposition / conditions to be avoided:** No decomposition if used according to specifications.
· **Possibility of hazardous reactions** No dangerous reactions known.
· **Conditions to avoid** No further relevant information available.
· **Incompatible materials:** No further relevant information available.
· **Hazardous decomposition products:** No dangerous decomposition products known.

*

11 Toxicological information

· **Information on toxicological effects**
· **Acute toxicity:**

· **LD/LC50 values that are relevant for classification:**		
28182-81-2 HDI Prepolymer		
Oral	LD50	1,000 mg/kg (rat)
Dermal	LD50	5,000 mg/kg (rabbit)
Inhalative	LC50/4 h	137-1,150 mg/l (rat)

· **Primary irritant effect:**
· **on the skin:** Irritant to skin and mucous membranes.
· **on the eye:** Irritating effect.
· **Sensitization:**
Sensitization possible through inhalation.
Sensitization possible through skin contact.
· **Additional toxicological information:**
The product shows the following dangers according to internally approved calculation methods for preparations:
Harmful
Irritant

· **Carcinogenic categories**

· **IARC (International Agency for Research on Cancer)**		
1330-20-7	xylene	3
14807-96-6	Talc	3
1333-86-4	Carbon black	2B

(Contd. on page 10)

Safety Data Sheet
acc. to OSHA HCS

Printing date 03/14/2018 Reviewed on 06/21/2017

Trade name: HR010 Hot Rod Black Kit with HR014,HRC06 & HRR06

(Contd. of page 9)

9002-88-4	Polyethylene low density	3
98-82-8	cumene	2B
100-41-4	ethylbenzene	2B

· **NTP (National Toxicology Program)**

98-82-8	cumene	R

· **OSHA-Ca (Occupational Safety & Health Administration)**

None of the ingredients is listed.

* 12 Ecological information

· **Toxicity**
· **Aquatic toxicity:** No further relevant information available.
· **Persistence and degradability** No further relevant information available.
· **Behavior in environmental systems:**
· **Bioaccumulative potential** No further relevant information available.
· **Mobility in soil** No further relevant information available.
· **Additional ecological information:**
· **General notes:**
Water hazard class 1 (Self-assessment): slightly hazardous for water
Do not allow undiluted product or large quantities of it to reach ground water, water course or sewage system.
· **Results of PBT and vPvB assessment**
· **PBT:** Not applicable.
· **vPvB:** Not applicable.
· **Other adverse effects** No further relevant information available.

13 Disposal considerations

· **Waste treatment methods**
· **Recommendation:**
Must not be disposed of together with household garbage. Do not allow product to reach sewage system.

· **Uncleaned packagings:**
· **Recommendation:** Disposal must be made according to official regulations.

* 14 Transport information

· **UN-Number**	
· **DOT, ADR, IMDG, IATA**	UN1263
· **UN proper shipping name**	
· **DOT**	Paint
· **ADR**	1263 Paint, special provision 640D
· **IMDG, IATA**	PAINT

(Contd. on page 11)

Safety Data Sheet
acc. to OSHA HCS

Printing date 03/14/2018

Reviewed on 06/21/2017

Trade name: HR010 Hot Rod Black Kit with HR014,HRC06 & HRR06

(Contd. of page 10)

· **Transport hazard class(es)**

· **DOT**

· **Class**	3 Flammable liquids
· **Label**	3

· **ADR, IMDG, IATA**

· **Class**	3 Flammable liquids
· **Label**	3

· **Packing group**	
· **DOT, ADR, IMDG, IATA**	II
· **Environmental hazards:**	
· **Marine pollutant:**	No
· **Special precautions for user**	Warning: Flammable liquids
· **EMS Number:**	F-E,S-E
· **Stowage Category**	B
· **Transport in bulk according to Annex II of MARPOL73/78 and the IBC Code**	Not applicable.
· **Transport/Additional information:**	
· **DOT**	
· **Quantity limitations**	On passenger aircraft/rail: 5 L On cargo aircraft only: 60 L
· **ADR**	
· **Excepted quantities (EQ)**	Code: E2 Maximum net quantity per inner packaging: 30 ml Maximum net quantity per outer packaging: 500 ml
· **IMDG**	
· **Limited quantities (LQ)**	5L
· **Excepted quantities (EQ)**	Code: E2 Maximum net quantity per inner packaging: 30 ml Maximum net quantity per outer packaging: 500 ml
· **UN "Model Regulation":**	UN 1263 PAINT, SPECIAL PROVISION 640D, 3, II

USA

(Contd. on page 12)

Safety Data Sheet
acc. to OSHA HCS

Printing date 03/14/2018

Reviewed on 06/21/2017

Trade name: HR010 Hot Rod Black Kit with HR014,HRC06 & HRR06

(Contd. of page 11)

*

15 Regulatory information

· **Safety, health and environmental regulations/legislation specific for the substance or mixture**
· **Sara**

· **Section 355 (extremely hazardous substances):**
None of the ingredient is listed.

· **Section 313 (Specific toxic chemical listings):**	
	Acrylic Resin
112-07-2	2-butoxyethyl acetate
1330-20-7	xylene
14807-96-6	Talc
95-63-6	1,2,4-trimethylbenzene
98-82-8	cumene
100-41-4	ethylbenzene

· **TSCA (Toxic Substances Control Act):**	
123-86-4	n-butyl acetate
67-64-1	acetone
112-07-2	2-butoxyethyl acetate
28182-81-2	HDI Prepolymer
108-65-6	2-methoxy-1-methylethyl acetate
9004-36-8	Cellulose Acetate Butyrate
110-43-0	heptan-2-one
108-83-8	2,6-dimethylheptan-4-one
1330-20-7	xylene
14807-96-6	Talc
19549-80-5	4,6-dimethylheptan-2-one
123-42-2	4-hydroxy-4-methylpentan-2-one
1333-86-4	Carbon black
41556-26-7	bis(1,2,2,6,6-Pentamethyl-4-piperidinyl) sebacate
95-63-6	1,2,4-trimethylbenzene
9002-88-4	Polyethylene low density
104810-48-2	poly(oxy-1,2-ethanediyl), α-[3-[3-(2H-benzotriazol-2-yl)-5-(1,1-dimethylethyl)-4-hydroxyphenyl]-1-oxopropyl]-ω-hydroxy-
104810-47-1	poly(oxy-1,2-ethanediyl), α-[3-[3-(2H-benzotriazol-2-yl)-5-(1,1-dimethylethyl)-4-hydroxyphenyl]-1-oxopropyl]-ω-[3-[3-(2H- benzotriazol-2-yl)-5-(1,1-dimethylethyl)-4-hydroxyphenyl]-1-oxopropoxy]-
108-67-8	mesitylene
82919-37-7	Methyl (1,2,2,6,6,- pentamethyl-4-piperidinyl) sebacate
25322-68-3	Polyethylene glycol
9038-95-3	OXIRANE,ME, POLYMER
98-82-8	cumene
106-79-6	Dimethyl sebacate(Impurity)
78-83-1	butanol

(Contd. on page 13)

Safety Data Sheet
acc. to OSHA HCS

Printing date 03/14/2018

Reviewed on 06/21/2017

Trade name: HR010 Hot Rod Black Kit with HR014,HRC06 & HRR06

(Contd. of page 12)

100-41-4	ethylbenzene
2403-89-6	4-Piperidinol, 1,2,2,6,6 pentamethyl- (Impurity)

· **TSCA new (21st Century Act) (Substances not listed)**

112926-00-8	precipitated Silica (Silica-Amorphous)
64742-95-6	Solvent naphtha (petroleum), light arom.

· **Proposition 65**

· **Chemicals known to cause cancer:**

1330-20-7	xylene
1333-86-4	Carbon black
95-63-6	1,2,4-trimethylbenzene
98-82-8	cumene
100-41-4	ethylbenzene

· **Chemicals known to cause reproductive toxicity for females:**

None of the ingredients is listed.

· **Chemicals known to cause reproductive toxicity for males:**

None of the ingredients is listed.

· **Chemicals known to cause developmental toxicity:**

None of the ingredients is listed.

· **Cancerogenity categories**

· **EPA (Environmental Protection Agency)**

67-64-1	acetone	I
1330-20-7	xylene	I
95-63-6	1,2,4-trimethylbenzene	II
108-67-8	mesitylene	II
98-82-8	cumene	D, CBD
100-41-4	ethylbenzene	D

· **TLV (Threshold Limit Value established by ACGIH)**

67-64-1	acetone	A4
112-07-2	2-butoxyethyl acetate	A3
1330-20-7	xylene	A4
14807-96-6	Talc	A4
1333-86-4	Carbon black	A4
100-41-4	ethylbenzene	A3

· **NIOSH-Ca (National Institute for Occupational Safety and Health)**

1333-86-4	Carbon black

· **GHS label elements** The product is classified and labeled according to the Globally Harmonized System (GHS).

· **Hazard pictograms**

GHS02 GHS08 GHS07

(Contd. on page 14)

(Contd. of page 13)

· **Signal word** Danger

· **Hazard-determining components of labeling:**
HDI Prepolymer
n-butyl acetate
acetone
precipitated Silica (Silica-Amorphous)
bis(1,2,2,6,6-Pentamethyl-4-piperidinyl) sebacate

· **Hazard statements**
H225 Highly flammable liquid and vapor.
H315 Causes skin irritation.
H319 Causes serious eye irritation.
H334 May cause allergy or asthma symptoms or breathing difficulties if inhaled.
H317 May cause an allergic skin reaction.
H371 May cause damage to organs.
H336 May cause drowsiness or dizziness.

· **Precautionary statements**

P210	Keep away from heat/sparks/open flames/hot surfaces. - No smoking.
P233	Keep container tightly closed.
P240	Ground/bond container and receiving equipment.
P241	Use explosion-proof electrical/ventilating/lighting/equipment.
P242	Use only non-sparking tools.
P243	Take precautionary measures against static discharge.
P260	Do not breathe dust/fume/gas/mist/vapors/spray.
P264	Wash thoroughly after handling.
P270	Do not eat, drink or smoke when using this product.
P272	Contaminated work clothing must not be allowed out of the workplace.
P280	Wear protective gloves/protective clothing/eye protection/face protection.
P284	[In case of inadequate ventilation] wear respiratory protection.
P303+P361+P353	If on skin (or hair): Take off immediately all contaminated clothing. Rinse skin with water/ shower.
P304+P341	If inhaled: If breathing is difficult, remove person to fresh air and keep comfortable for breathing.
P305+P351+P338	If in eyes: Rinse cautiously with water for several minutes. Remove contact lenses, if present and easy to do. Continue rinsing.
P308+P311	IF exposed or concerned: Call a poison center/doctor.
P362+P364	Take off contaminated clothing and wash it before reuse.
P333+P313	If skin irritation or rash occurs: Get medical advice/attention.
P321	Specific treatment (see on this label).
P337+P313	If eye irritation persists: Get medical advice/attention.
P342+P311	If experiencing respiratory symptoms: Call a poison center/doctor.
P363	Wash contaminated clothing before reuse.
P370+P378	In case of fire: Use for extinction: CO2, powder or water spray.
P403+P235	Store in a well-ventilated place. Keep cool.
P405	Store locked up.
P501	Dispose of contents/container in accordance with local/regional/national/international regulations.

· **Chemical safety assessment:** A Chemical Safety Assessment has not been carried out.

(Contd. on page 15)

Safety Data Sheet
acc. to OSHA HCS

Printing date 03/14/2018 Reviewed on 06/21/2017

Trade name: HR010 Hot Rod Black Kit with HR014,HRC06 & HRR06

(Contd. of page 14)

16 Other information

This information is based on our present knowledge. However, this shall not constitute a guarantee for any specific product features and shall not establish a legally valid contractual relationship.

· **Department issuing SDS:** Environment protection department.
· **Contact:** Rita Joiner (rjoiner@semproducts.com)
· **Date of preparation / last revision** 03/14/2018 / 6
· **Abbreviations and acronyms:**
RID: Règlement international concernant le transport des marchandises dangereuses par chemin de fer (Regulations Concerning the International Transport of Dangerous Goods by Rail)
ICAO: International Civil Aviation Organisation
ADR: Accord européen sur le transport des marchandises dangereuses par Route (European Agreement concerning the International Carriage of Dangerous Goods by Road)
IMDG: International Maritime Code for Dangerous Goods
DOT: US Department of Transportation
IATA: International Air Transport Association
ACGIH: American Conference of Governmental Industrial Hygienists
EINECS: European Inventory of Existing Commercial Chemical Substances
ELINCS: European List of Notified Chemical Substances
CAS: Chemical Abstracts Service (division of the American Chemical Society)
NFPA: National Fire Protection Association (USA)
HMIS: Hazardous Materials Identification System (USA)
VOC: Volatile Organic Compounds (USA, EU)
LC50: Lethal concentration, 50 percent
LD50: Lethal dose, 50 percent
PBT: Persistent, Bioaccumulative and Toxic
vPvB: very Persistent and very Bioaccumulative
NIOSH: National Institute for Occupational Safety
OSHA: Occupational Safety & Health
TLV: Threshold Limit Value
PEL: Permissible Exposure Limit
REL: Recommended Exposure Limit
BEI: Biological Exposure Limit
Flam. Liq. 2: Flammable liquids – Category 2
Skin Irrit. 2: Skin corrosion/irritation – Category 2
Eye Irrit. 2A: Serious eye damage/eye irritation – Category 2A
Resp. Sens. 1: Respiratory sensitisation – Category 1
Skin Sens. 1: Skin sensitisation – Category 1
STOT SE 2: Specific target organ toxicity (single exposure) – Category 2
· *** Data compared to the previous version altered.**

HOT ROD BLACK KIT
TECHNICAL DATA SHEET

Check local VOC regulations to ensure compliance of all products in your area.

DESCRIPTION

Hot Rod Black is the industry leading matte, two-component, single stage black for low gloss accent stripes, hoods or entire vehicles.

FEATURES

- Durable and mar resistant
- Excellent resistance to chalking and fading
- Retains color
- Smooth and uniform finish
- National Rule VOC compliant

SUITABLE SUBSTRATES

- Properly prepped primed or painted surfaces

TYPICAL PROPERTIES

Part:	Product Name:	Color:	Container:
HR010	Hot Rod Black Kit	Black	1.5 Quart Kit

Kit contains:	One quart Hot Rod Black
	One half pint Hot Rod Catalyst
	One half pint Hot Rod Reducer
Regulatory RTS VOC:	539 g/L, 4.50 #/gal
Regulatory VOC Hot Rod Black:	402 g/L, 3.35 #/gal
Regulatory VOC Hot Rod Catalyst:	506 g/L, 4.22 #/gal
Regulatory VOC Hot Rod Reducer:	940 g/L, 7.83 #/gal
Pot life:	60 minutes @ 70°F (21°C) and 50% R.H.
Coverage:	248 sq.ft./gal @ 2 mils
Flash time:	10 - 15 minutes
Purge before baking:	30 minutes
Bake time:	30 minutes @ 160°F (71°C)
Air dry time (preferred):	16 hours @ 70°F (21°C)
Tape Time:	24 hours @ 70°F (21°C)

Check local VOC regulations to ensure compliance of all products in your area.

HANDLING AND APPLICATION

PREPARATION:

1. Clean with SEM Solve or **XXX Universal Surface Cleaner.**
2. For best results, prime surface with **Metalock™ DTM High Build Primer** or World Class™ DTM Primer, according to directions. Sand with P400 – P600 grit.

MIXING:

Shake or stir thoroughly. Mix by volume:

4 Parts	1 Part	1 Part
Hot Rod Black	Hot Rod Catalyst	Hot Rod Reducer

Note: Use of additives other than Hot Rod Catalyst and **Hot Rod Reducer** are not recommended and will affect both the appearance and performance of Hot Rod Black.

APPLICATION:

Set air pressure to:	40 - 45 psi for non-HVLP
	8 - 10 psi at the cap for HVLP equipment

1. Use a gun equipped with a 1.3 - 1.4 nozzle. Spray one medium-wet coat keeping the gun 5 - 7" from the substrate and minimum overlap of 75%. Allow to flash dry, approximately 10 – 15 minutes.
2. Spray a second identical medium-wet coat and allow an additional 30 minutes before baking for 30 minutes at 120°F (49°C), or air dry for 16 hours.

Note: Always spray a test panel to ensure desired gloss level. Variations in application, temperature, and gun set up can affect the final gloss of Hot Rod Black.

Do not recoat after panel has been baked or air-dried without first sanding with P400 – 600 grit.

CARE:

Do not buff or polish. When washing is necessary, use a mild soap and dry immediately with a soft cloth or chamois. To detail, use a microfiber or other soft towel and a dedicated matte finish spray wax or detailer. Always test in an inconspicuous area first.

CLEANUP:

Use appropriate cleaning materials compliant with VOC regulations in your area.

Check local VOC regulations to ensure compliance of all products in your area.

STORAGE:

Hot Rod Black **Kit** should be stored in a cool, dry place with adequate ventilation away from heat, sparks and flames. The shelf life for Hot Rod Black **Kit** is 3 years when stored under normal conditions.

RELATED PRODUCTS:

Part:	Product Name:	Size:
38371	SEM Solve	Gallon
38373	SEM Solve	20 oz. Aerosol
38374	SEM Solve	Quart
38375	SEM Solve	5 Gallon
50121	World Class™ DTM Primer	Gallon
50124	World Class DTM Primer	Quart
50134	World Class DTM Primer Activator	Cone Quart
50136	World Class DTM Primer Activator	Half Pint
77771	XXX Universal Surface Cleaner	Gallon
77774	XXX Universal Surface Cleaner	Quart
ML010	Metalock™ DTM High Build Primer	1.25 Gallon Kit
ML014	Metalock DTM High Build Primer	Quart
MLH16	Metalock Hardener	Half Pint

Technical Consultation Service

Our Technical Staff is ready to assist you with any questions. You are invited to take advantage of our extensive experience, laboratory services and trained field service representatives. Call (800) 831-1122 for answers to your questions. Hours of operation are Monday through Thursday 8:00 am until 5:00 pm EST and on Friday 8:00 am until 4:30 pm EST.

Disclaimer:
The information supplied in this document is for guidance only and should not be construed as a warranty. All implied warranties are expressly disclaimed. All users of the materials are responsible for assuring that it is suitable for their needs, environment and use. All data subject to change as SEM deems appropriate.

Users should review the Safety Data Sheet (SDS) and product label for the material to determine possible health hazards, appropriate engineering controls and precautions to be observed in using the material. Copies of the SDS and product label are available upon request.

EVERCOAT®

SAFETY DATA SHEET

Revision Date 10-May-2021 **Version** 2

1. IDENTIFICATION

Product identifier
Product Name EVERCOAT 4:1 POLYESTER PRIMER CATALYST

Other means of identification
Product Code 100733

Recommended use of the chemical and restrictions on use
Recommended Use Catalyst. For professional use only.
Uses advised against Uses other than recommended use.

Details of the supplier of the safety data sheet
Manufacturer Address
ITW Evercoat
A division of Illinois Tool Works Inc.
6600 Cornell Road
Cincinnati, OH 45242 USA
513-489-7600

May Also Be Distributed by:
ITW Permatex Canada
101-2360 Bristol Circle
Oakville, ON Canada L6H 6M5
Telephone: (800) 924-6994

24-hour emergency phone number
CHEMTREC: 1-800-424-9300
INTERNATIONAL: 1-703-527-3887

E-mail address: Info@evercoat.com

2. HAZARDS IDENTIFICATION

Classification

OSHA Regulatory Status
This chemical is considered hazardous by the 2012 OSHA Hazard Communication Standard (29 CFR 1910.1200)

Serious eye damage/eye irritation	Category 2
Specific target organ toxicity (single exposure)	Category 1
Flammable liquids	Category 2

Label elements

Emergency Overview

Signal word
Danger

Causes serious eye irritation
Causes damage to organs
Highly flammable liquid and vapor

Appearance Clear **Physical state** Liquid **Odor** Mild

Precautionary Statements - Prevention
Wash face, hands and any exposed skin thoroughly after handling
Do not breathe dust/fume/gas/mist/vapors/spray
Do not eat, drink or smoke when using this product
Keep away from heat/sparks/open flames/hot surfaces. - No smoking
Keep container tightly closed
Ground/bond container and receiving equipment
Use explosion-proof electrical/ ventilating/ lighting/ equipment
Use non-sparking tools
Take precautionary measures against static discharge
Wear protective gloves/protective clothing/eye protection/face protection

Precautionary Statements - Response
IF exposed: Call a POISON CENTER or doctor/physician

IF IN EYES: Rinse cautiously with water for several minutes. Remove contact lenses, if present and easy to do. Continue rinsing
If eye irritation persists: Get medical advice/attention
IF ON SKIN (or hair): Remove/Take off immediately all contaminated clothing. Rinse skin with water/shower
In case of fire: Use CO_2, dry chemical, or foam to extinguish.

Precautionary Statements - Storage
Store locked up
Store in a well-ventilated place. Keep cool

Precautionary Statements - Disposal
Dispose of contents/container to an approved waste disposal plant

Hazards not otherwise classified (HNOC)
Not applicable

Other Information
May be harmful if swallowed. May be harmful in contact with skin. Harmful to aquatic life with long lasting effects. Harmful to aquatic life.

3. COMPOSITION/INFORMATION ON INGREDIENTS

Chemical name	CAS No	Weight-%
Methyl Acetate	79-20-9	40 - 70
2-Butanone, peroxide	1338-23-4	1 - 5
Trimethylpentanediol isobutyrate	6846-50-0	1 - 5
Methanol	67-56-1	1 - 5

4. FIRST AID MEASURES

Description of first aid measures

General advice Get medical advice/attention if you feel unwell.

Eye contact IF IN EYES: Rinse cautiously with water for several minutes. Remove contact lenses, if present and easy to do. Continue rinsing. If eye irritation persists: Get medical advice/attention.

Skin contact IF ON SKIN:. Wash skin with soap and water. If skin irritation persists, call a physician. Take off contaminated clothing and wash before reuse.

Inhalation IF INHALED: Remove victim to fresh air and keep at rest in a position comfortable for

breathing. If symptoms persist, call a physician.

Ingestion IF SWALLOWED:. Do NOT induce vomiting. Never give anything by mouth to an unconscious person. Call a physician.

Self-protection of the first aider Ensure that medical personnel are aware of the material(s) involved and take precautions to protect themselves.

Most important symptoms and effects, both acute and delayed

Symptoms See section 2 for more information.

Indication of any immediate medical attention and special treatment needed

Note to physicians Treat symptomatically.

5. FIRE-FIGHTING MEASURES

Suitable extinguishing media
Carbon dioxide (CO2), Use dry chemical, Foam

Unsuitable extinguishing media
None

Specific hazards arising from the chemical
Flammable. Extremely flammable.

Explosion data
Sensitivity to Mechanical Impact None.
Sensitivity to Static Discharge None.

Protective equipment and precautions for firefighters
As in any fire, wear self-contained breathing apparatus pressure-demand, MSHA/NIOSH (approved or equivalent) and full protective gear.

6. ACCIDENTAL RELEASE MEASURES

Personal precautions, protective equipment and emergency procedures

Personal precautions Remove all sources of ignition. Use personal protective equipment as required.

Environmental precautions

Environmental precautions Do not flush into surface water or sanitary sewer system. See section 12 for additional ecological information.

Methods and material for containment and cleaning up

Methods for containment Prevent further leakage or spillage if safe to do so.

Methods for cleaning up Soak up with inert absorbent material.

Prevention of secondary hazards Clean contaminated objects and areas thoroughly observing environmental regulations.

7. HANDLING AND STORAGE

Precautions for safe handling

Advice on safe handling Handle in accordance with good industrial hygiene and safety practice. Avoid breathing vapors or mists. Avoid contact with skin, eyes or clothing. Wash thoroughly after handling.

Wash contaminated clothing before reuse. Use personal protective equipment as required.

Conditions for safe storage, including any incompatibilities

Storage Conditions Keep away from heat, sparks, flame and other sources of ignition (i.e., pilot lights, electric motors and static electricity).

Incompatible materials Strong oxidizing agents

8. EXPOSURE CONTROLS/PERSONAL PROTECTION

Control parameters

Exposure Guidelines

Chemical name	ACGIH TLV	OSHA PEL	NIOSH IDLH
Methyl Acetate 79-20-9	STEL: 250 ppm TWA: 200 ppm	TWA: 200 ppm TWA: 610 mg/m³ (vacated) TWA: 200 ppm (vacated) TWA: 610 mg/m³ (vacated) STEL: 250 ppm (vacated) STEL: 760 mg/m³	IDLH: 3100 ppm TWA: 200 ppm TWA: 610 mg/m³ STEL: 250 ppm STEL: 760 mg/m³
2-Butanone, peroxide 1338-23-4	Ceiling: 0.2 ppm	(vacated) Ceiling: 0.7 ppm (vacated) Ceiling: 5 mg/m³	Ceiling: 0.2 ppm Ceiling: 1.5 mg/m³
Methanol 67-56-1	STEL: 250 ppm TWA: 200 ppm S*	TWA: 200 ppm TWA: 260 mg/m³ (vacated) TWA: 200 ppm (vacated) TWA: 260 mg/m³ (vacated) STEL: 250 ppm (vacated) STEL: 325 mg/m³ (vacated) S*	IDLH: 6000 ppm TWA: 200 ppm TWA: 260 mg/m³ STEL: 250 ppm STEL: 325 mg/m³

NIOSH IDLH Immediately Dangerous to Life or Health

Other Information Vacated limits revoked by the Court of Appeals decision in AFL-CIO v. OSHA, 965 F.2d 962 (11th Cir., 1992).

Appropriate engineering controls

Engineering Controls Showers
Eyewash stations
Ventilation systems

Individual protection measures, such as personal protective equipment

Eye/face protection Wear safety glasses with side shields (or goggles).

Skin and body protection Wear protective natural rubber, nitrile rubber, Neoprene™ or PVC gloves.

Respiratory protection Use NIOSH-approved air-purifying respirator with organic vapor cartridge or canister, as appropriate.

General Hygiene Considerations Handle in accordance with good industrial hygiene and safety practice. Regular cleaning of equipment, work area and clothing is recommended.

9. PHYSICAL AND CHEMICAL PROPERTIES

9.1. Information on basic physical and chemical properties

Physical state Liquid
Appearance Clear
Odor Mild
Odor threshold No information available

Property	Values	Remarks • Method
pH	No information available	
Melting point / freezing point	No information available	
Boiling point / boiling range	56 °C / 133 °F	
Flash point	-10 °C / 14 °F	
Evaporation rate	No information available	
Flammability (solid, gas)	No information available	
Flammability Limit in Air		
Upper flammability limit:	No information available	
Lower flammability limit:	No information available	
Vapor pressure	No information available	
Vapor density	No information available	
Relative density	1.04	
Water solubility	No information available	
Solubility(ies)	Insoluble	
Partition coefficient	No information available	
Autoignition temperature	No information available	
Hyphen	No information available	
Kinematic viscosity	No information available	
Dynamic viscosity	No information available	
Explosive properties	No information available	
Oxidizing properties	No information available	

Other Information

Softening point	No information available
Molecular weight	No information available
VOC content	Hardener for Automotive Coating Primer Mixture. Regulatory 2.6 lbs./gal. or 311 g/l. Actual 0.69 lbs./gal. or 83 g/l.
Density	No information available
Bulk density	No information available
SADT (self-accelerating decomposition temperature)	No information available

10. STABILITY AND REACTIVITY

Reactivity
No information available

Chemical stability
Stable under normal conditions

Possibility of Hazardous Reactions
None under normal processing.

Conditions to avoid
Excessive heat.

Incompatible materials
Strong oxidizing agents

Hazardous Decomposition Products
Carbon oxides

11. TOXICOLOGICAL INFORMATION

Information on likely routes of exposure

Inhalation	May cause irritation of respiratory tract.
Eye contact	Contact with eyes may cause irritation. May cause redness and tearing of the eyes.

Skin contact May cause skin irritation and/or dermatitis.

Ingestion Ingestion may cause irritation to mucous membranes.

Chemical name	Oral LD50	Dermal LD50	Inhalation LC50
Methyl Acetate 79-20-9	> 5 g/kg (Rat)	> 5 g/kg (Rabbit)	> 49000 mg/m³ (Rat) 4 h
2-Butanone, peroxide 1338-23-4	= 407 mg/kg (Rat)	-	= 200 ppm (Rat) 4 h
Trimethylpentanediol isobutyrate 6846-50-0	> 3200 mg/kg (Rat)	-	> 5.3 mg/L (Rat) 6 h
Methanol 67-56-1	= 6200 mg/kg (Rat)	= 15840 mg/kg (Rabbit)	= 22500 ppm (Rat) 8 h

Symptoms related to the physical, chemical and toxicological characteristics

Symptoms No information available.

Delayed and immediate effects as well as chronic effects from short and long-term exposure

Sensitization No information available.
Germ cell mutagenicity No information available.
Carcinogenicity The table below indicates whether each agency has listed any ingredient as a carcinogen.

ACGIH (American Conference of Governmental Industrial Hygienists)
A2 - Suspected Human Carcinogen
A3 - Animal Carcinogen
IARC (International Agency for Research on Cancer)
Group 2B - Possibly Carcinogenic to Humans
Not classifiable as a human carcinogen
Group 1 - Carcinogenic to Humans
NTP (National Toxicology Program)
Reasonably Anticipated - Reasonably Anticipated to be a Human Carcinogen
Known - Known Carcinogen
OSHA (Occupational Safety and Health Administration of the US Department of Labor)
X - Present

Chronic toxicity May cause adverse liver effects. Contains a known or suspected reproductive toxin.
Target organ effects Central nervous system, Central Vascular System (CVS), Eyes, Liver, Reproductive system, Respiratory system, Skin, Lungs, Gastrointestinal tract (GI), Kidney.

The following values are calculated based on chapter 3.1 of the GHS document

ATEmix (oral) 2418 mg/kg
ATEmix (dermal) 3962 mg/kg
ATEmix (inhalation-dust/mist) 21.8 mg/l
ATEmix (inhalation-vapor) 3974 mg/l

12. ECOLOGICAL INFORMATION

Ecotoxicity

Persistence and degradability
No information available.

Bioaccumulation
No information available.

Mobility
No information available.

Chemical name	Partition coefficient
Methyl Acetate 79-20-9	0.18

Methanol 67-56-1	-0.77

Other adverse effects
No information available

13. DISPOSAL CONSIDERATIONS

Waste treatment methods

Disposal of wastes This material, as supplied, is a hazardous waste according to federal regulations (40 CFR 261).

Contaminated packaging Do not reuse container.

US EPA Waste Number D001

This product contains one or more substances that are listed with the State of California as a hazardous waste.

Chemical name	California Hazardous Waste Status
Methyl Acetate 79-20-9	Toxic Ignitable
2-Butanone, peroxide 1338-23-4	Toxic Ignitable
Methanol 67-56-1	Toxic Ignitable

14. TRANSPORT INFORMATION

Note: This information is not intended to convey all specific regulatory information relating to this product. Transportation classifications may vary by container volume and may be influenced by regional or country variations in regulations. It is the responsibility of the transporting organization to follow all applicable laws, regulations and rules relating to the transportation of the material.

DOT

UN/ID No UN1993
Proper shipping name Flammable Liquid N.O.S. (Methyl Acetate)
Transport hazard class(es) 3
Packing Group II

IATA

UN number or ID number UN1993
Proper shipping name Flammable Liquid N.O.S. (Methyl Acetate)
Transport hazard class(es) 3
Packing group II
ERG Code No information available.

IMDG

UN number or ID number UN1993
Proper shipping name Flammable Liquid N.O.S. (Methyl Acetate)
Transport hazard class(es) 3
Packing Group II
EmS-No No information available

15. REGULATORY INFORMATION

International Inventories

TSCA Complies
DSL/NDSL Complies

EINECS/ELINCS	Complies
ENCS	Complies
IECSC	Complies
KECL	Complies
PICCS	Complies
AICS	Complies

Legend:

TSCA - United States Toxic Substances Control Act Section 8(b) Inventory
DSL/NDSL - Canadian Domestic Substances List/Non-Domestic Substances List
EINECS/ELINCS - European Inventory of Existing Chemical Substances/European List of Notified Chemical Substances
ENCS - Japan Existing and New Chemical Substances
IECSC - China Inventory of Existing Chemical Substances
KECL - Korean Existing and Evaluated Chemical Substances
PICCS - Philippines Inventory of Chemicals and Chemical Substances
AICS - Australian Inventory of Chemical Substances

US Federal Regulations

SARA 313

Section 313 of Title III of the Superfund Amendments and Reauthorization Act of 1986 (SARA). This product contains a chemical or chemicals which are subject to the reporting requirements of the Act and Title 40 of the Code of Federal Regulations, Part 372

Chemical name	SARA 313 - Threshold Values %
Methanol - 67-56-1	1.0

SARA 311/312 Hazard Categories

Acute health hazard	Yes
Chronic Health Hazard	No
Fire hazard	Yes
Sudden release of pressure hazard	No
Reactive Hazard	No

CWA (Clean Water Act)

This product contains the following substances which are regulated pollutants pursuant to the Clean Water Act (40 CFR 122.21 and 40 CFR 122.42)

CERCLA

This material, as supplied, contains one or more substances regulated as a hazardous substance under the Comprehensive Environmental Response Compensation and Liability Act (CERCLA) (40 CFR 302)

Chemical name	Hazardous Substances RQs	CERCLA/SARA RQ	Reportable Quantity (RQ)
2-Butanone, peroxide 1338-23-4	10 lb	-	RQ 10 lb final RQ RQ 4.54 kg final RQ
Methanol 67-56-1	5000 lb	-	RQ 5000 lb final RQ RQ 2270 kg final RQ

US State Regulations

California Proposition 65

This product contains the following Proposition 65 chemicals

Chemical name	California Proposition 65
Methanol 67-56-1	Developmental

U.S. State Right-to-Know Regulations

Chemical name	New Jersey	Massachusetts	Pennsylvania
Methyl Acetate 79-20-9	X	X	X
2-Butanone, peroxide 1338-23-4	X	X	X
Methanol 67-56-1	X	X	X
Water	-	-	X

7732-18-5			
Hydrogen Peroxide 7722-84-1	X	X	X
Butanone 78-93-3	X	X	X

U.S. EPA Label Information
EPA Pesticide Registration Number Not applicable

WHMIS Hazard Class
D2A - Very toxic materials, B2 - Flammable liquid, D2B - Toxic materials

16. OTHER INFORMATION, INCLUDING DATE OF PREPARATION OF THE LAST REVISION

NFPA	**Health hazards** 2	**Flammability** 3	**Instability** 0	-
HMIS	**Health hazards** 2	**Flammability** 3	**Physical hazards** 0	**Personal protection** B

NFPA (National Fire Protection Association)
HMIS (Hazardous Material Information System)

Revision Date 10-May-2021

Disclaimer
Illinois Tool Works Inc. believes the information contained in this data sheet is accurate as of the date compiled. However, Illinois Tool Works Inc. makes no warranty, express or implied, as to the accuracy, reliability or completeness of the information. User is responsible for evaluating whether such information or this product is fit for a particular purpose and suitable for a particular use or application. The information in this data sheet may not be valid if this product is used in combination with other products or in processes for which it was not designed. Illinois Tool Works Inc. disclaims any liability for consequential or incidental damages of any kind, including lost profits, arising from the sale or use of this product. Ensure you have the most current version of this data sheet by contacting us or reviewing our web site.

End of Safety Data Sheet

EVERCOAT®

TECHNICAL DATA SHEET

PRODUCT: **Finish Sand 4:1 Hybrid Polyester Primer Surfacer**

PART NUMBER: **100738** **Gallon** **2 units/case**

DESCRIPTION:

Finish Sand 4:1 is a hybrid polyester primer surfacer that utilizes patented technology to provide a smooth, low-texture finish. It is ideal for holding down troublesome repairs on a variety of substrates. Finish Sand 4:1 passes 500 hours in salt spray test (ASTM B117) and can be applied over properly sanded and cleaned bare metal. It is compatible with waterborne paint systems and VOC compliant. **Must be catalyzed with 733 4:1 Polyester Primer Catalyst or 734 Fast 4:1 Polyester Primer Catalyst only!**

SUBSTRATES:

- Fiberglass
- SMC
- Rigid Plastics
- Bare Metal
- Aluminum
- Body Filler or Putty

NOTE: All substrates must be properly sanded and cleaned prior to primer application for optimum performance

CLEANING:

- Surface must be clean and free of dirt, oil, grease and wax
- To solvent clean ***raw, exposed fiberglass***, it is recommended to clean exposed area with ***acetone***.

PREPARATION:

- Sand repair area with 80 grit and featheredge using 180 grit sandpaper
- Final clean with a quality wax and grease remover to remove sanding residue prior to applying Finish Sand 4:1

Body Filler or Putty

- Finish sanding body filler or putty with 180-220 grit sandpaper
- Featheredge with 320 grit sandpaper
- Blow off the surface with an air blow gun

Made and Printed in the U.S. | ©2015 Evercoat

MIXING:

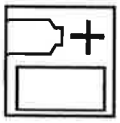

4 parts 738 Finish Sand 4:1 Primer
to
1 part 733 4:1 Catalyst or 734 Fast 4:1 Catalyst

- Shake and stir thoroughly before mixing
- **733 – Pot Life is 60 minutes @ 75°F (24°C); pot life decreases at higher temperatures**
- **734 – Pot Life is 45 minutes @ 75°F (24°C); pot life decreases at higher temperatures**
- ***Do not leave product in the spray gun for longer than 30 minutes***

APPLICATION:

- Use a primer gun with a 1.6 to 2.0 fluid nozzle/air cap (Spray at paint gun manufacturer's recommended air pressure)
- Apply **2-3** medium wet coats allowing **5-10** minutes flash time between coats

FINISH:

- Finish Sand 4:1 will be ready to sand in *2 hours*, depending on film build
- Once dry, sand Finish Sand 4:1 with *180-220 grit* sandpaper followed by *320 grit or finer*

TECHNICAL SPECIFICATIONS:

Appearance	Gray liquid
VOC	Refer to Section 9 of the Safety Data Sheet
Dry-Film-Thickness (DFT)	2.0 - 3.0 mils per coat
Solids by Volume	60-65%
Solids by Weight	65-70%

SAFETY & HANDLING:

IMPORTANT: The contents of these packages must be mixed with other components before the products can be used. Before opening the packages, be sure to understand the warnings on all labels of all components since the resulting product will have the warnings and cautions of all its parts. Improper spray technique may result in hazardous conditions. Follow the spray equipment manufacturer's instructions to prevent injury or fire. Follow respirator manufacturer's directions for respirator use. Always wear eye and skin protection. Observe all precautions. Consult MSDS for further safety information and/or handling instructions. In case of emergency, contact your local emergency room or poison control center immediately. For professional use only. Material Safety Data Sheets can be found online @ evercoat.com.

FGE 738

EVERCOAT

SAFETY DATA SHEET

Revision Date 03-Mar-2021

Version 2

1. IDENTIFICATION

Product identifier

Product Name EVERCOAT FINISH SAND 4:1

Other means of identification

Product Code 100738

Recommended use of the chemical and restrictions on use

Recommended Use Polyester Primer Surfacer. For professional use only.

Uses advised against Uses other than recommended use.

Details of the supplier of the safety data sheet

Manufacturer Address
ITW Evercoat
6600 Cornell Road
Cincinnati, Ohio 45242
Telephone: 513-489-7600

24-hour emergency phone number
CHEMTREC: 1-800-424-9300
INTERNATIONAL: 1-703-527-3887

May Also Be Distributed by:
ITW Permatex Canada
101-2360 Bristol Circle
Oakville, ON Canada L6H 6M5
Telephone: (800) 924-6994

E-mail address: Info@evercoat.com

2. HAZARDS IDENTIFICATION

Classification

OSHA Regulatory Status
This chemical is considered hazardous by the 2012 OSHA Hazard Communication Standard (29 CFR 1910.1200)

Acute toxicity - Inhalation (Dusts/Mists)	Category 4
Skin corrosion/irritation	Category 2
Serious eye damage/eye irritation	Category 2A
Germ cell mutagenicity	Category 1B
Carcinogenicity	Category 1A
Reproductive toxicity	Category 2
Specific target organ toxicity (repeated exposure)	Category 1
Flammable liquids	Category 2

Label elements

Emergency Overview

Signal word
Danger

Harmful if inhaled
Causes skin irritation
Causes serious eye irritation
May cause genetic defects
May cause cancer
Suspected of damaging fertility or the unborn child
Causes damage to organs through prolonged or repeated exposure
Highly flammable liquid and vapor

Appearance Gray **Physical state** Liquid **Odor** Aromatic

Precautionary Statements - Prevention
Obtain special instructions before use
Do not handle until all safety precautions have been read and understood
Use personal protective equipment as required
Use only outdoors or in a well-ventilated area
Wash face, hands and any exposed skin thoroughly after handling
Wear eye/face protection
Do not breathe dust/fume/gas/mist/vapors/spray
Do not eat, drink or smoke when using this product
Keep away from heat/sparks/open flames/hot surfaces. - No smoking
Keep container tightly closed
Ground/bond container and receiving equipment
Use explosion-proof electrical/ ventilating/ lighting/ equipment
Use non-sparking tools
Take precautionary measures against static discharge

Precautionary Statements - Response
IF exposed or concerned: Get medical advice/attention

IF IN EYES: Rinse cautiously with water for several minutes. Remove contact lenses, if present and easy to do. Continue rinsing
If eye irritation persists: Get medical advice/attention
If skin irritation occurs: Get medical advice/attention
IF ON SKIN (or hair): Remove/Take off immediately all contaminated clothing. Rinse skin with water/shower
Wash contaminated clothing before reuse
IF INHALED: Remove victim to fresh air and keep at rest in a position comfortable for breathing
In case of fire: Use CO2, dry chemical, or foam to extinguish.

Precautionary Statements - Storage
Store locked up
Store in a well-ventilated place. Keep cool

Precautionary Statements - Disposal
Dispose of contents/container to an approved waste disposal plant

Hazards not otherwise classified (HNOC)
Not applicable

Other Information
May be harmful if swallowed. May be harmful in contact with skin. Toxic to aquatic life with long lasting effects.

3. COMPOSITION/INFORMATION ON INGREDIENTS

Chemical Name	CAS No	Weight-%
Styrene	100-42-5	10 - 30
Acetone	67-64-1	10 - 30
Titanium Dioxide	13463-67-7	3 - 7
Talc (hydrous magnesium silicate)	14807-96-6	3 - 7

Toluene	108-88-3	0.1 - 1
Mineral Spirits (Stoddard Solvent)	8052-41-3	0.1 - 1
Crystalline Silica (Quartz)	14808-60-7	0.1 - 1
Naphtha (petroleum), hydrotreated heavy	64742-48-9	0.1 - 1
Copper Naphthenate	1338-02-9	0.1 - 1

4. FIRST AID MEASURES

Description of first aid measures

General advice Get medical advice/attention if you feel unwell.

Eye contact IF IN EYES: Rinse cautiously with water for several minutes. Remove contact lenses, if present and easy to do. Continue rinsing. If eye irritation persists: Get medical advice/attention.

Skin contact IF ON SKIN:. Wash skin with soap and water. If skin irritation persists, call a physician. Take off contaminated clothing and wash before reuse.

Inhalation IF INHALED: Remove victim to fresh air and keep at rest in a position comfortable for breathing. If symptoms persist, call a physician.

Ingestion IF SWALLOWED:. Do NOT induce vomiting. Never give anything by mouth to an unconscious person. Call a physician.

Self-protection of the first aider Ensure that medical personnel are aware of the material(s) involved and take precautions to protect themselves.

Most important symptoms and effects, both acute and delayed

Symptoms See section 2 for more information.

Indication of any immediate medical attention and special treatment needed

Note to physicians Treat symptomatically.

5. FIRE-FIGHTING MEASURES

Suitable extinguishing media
Carbon dioxide (CO2), Use dry chemical, Foam

Unsuitable extinguishing media
None

Specific hazards arising from the chemical
Flammable.

Explosion data
Sensitivity to Mechanical Impact None.
Sensitivity to Static Discharge None.

Protective equipment and precautions for firefighters
As in any fire, wear self-contained breathing apparatus pressure-demand, MSHA/NIOSH (approved or equivalent) and full protective gear.

6. ACCIDENTAL RELEASE MEASURES

Personal precautions, protective equipment and emergency procedures

Personal precautions Remove all sources of ignition. Use personal protective equipment as required.

Environmental precautions

Environmental precautions Do not flush into surface water or sanitary sewer system. See section 12 for additional ecological information.

Methods and material for containment and cleaning up

Methods for containment Prevent further leakage or spillage if safe to do so.

Methods for cleaning up Soak up with inert absorbent material.

Prevention of secondary hazards Clean contaminated objects and areas thoroughly observing environmental regulations.

7. HANDLING AND STORAGE

Precautions for safe handling

Advice on safe handling Handle in accordance with good industrial hygiene and safety practice. Avoid breathing vapors or mists. Avoid contact with skin, eyes or clothing. Wash thoroughly after handling. Wash contaminated clothing before reuse. Use personal protective equipment as required.

Conditions for safe storage, including any incompatibilities

Storage Conditions Keep away from heat, sparks, flame and other sources of ignition (i.e., pilot lights, electric motors and static electricity).

Incompatible materials Strong oxidizing agents

8. EXPOSURE CONTROLS/PERSONAL PROTECTION

Control parameters

Exposure Guidelines

Chemical Name	ACGIH TLV	OSHA PEL	NIOSH IDLH
Styrene 100-42-5	STEL: 20 ppm TWA: 10 ppm	TWA: 100 ppm (vacated) TWA: 50 ppm (vacated) TWA: 215 mg/m³ (vacated) STEL: 100 ppm (vacated) STEL: 425 mg/m³ Ceiling: 200 ppm	IDLH: 700 ppm TWA: 50 ppm TWA: 215 mg/m³ STEL: 100 ppm STEL: 425 mg/m³
Acetone 67-64-1	STEL: 500 ppm TWA: 250 ppm	TWA: 1000 ppm TWA: 2400 mg/m³ (vacated) TWA: 750 ppm (vacated) TWA: 1800 mg/m³ (vacated) STEL: 2400 mg/m³ The acetone STEL does not apply to the cellulose acetate fiber industry. It is in effect for all other sectors. (vacated) STEL: 1000 ppm	IDLH: 2500 ppm TWA: 250 ppm TWA: 590 mg/m³
Titanium Dioxide 13463-67-7	TWA: 10 mg/m³	TWA: 15 mg/m³ total dust (vacated) TWA: 10 mg/m³ total dust	IDLH: 5000 mg/m³ TWA: 2.4 mg/m³ CIB 63 fine TWA: 0.3 mg/m³ CIB 63 ultrafine, including engineered nanoscale
Talc (hydrous magnesium silicate) 14807-96-6	TWA: 2 mg/m³ particulate matter containing no asbestos and <1% crystalline silica, respirable particulate matter	(vacated) TWA: 2 mg/m³ respirable dust <1% Crystalline silica, containing no Asbestos TWA: 20 mppcf if 1% Quartz or more;use Quartz limit	IDLH: 1000 mg/m³ TWA: 2 mg/m³ containing no Asbestos and <1% Quartz respirable dust
Toluene 108-88-3	TWA: 20 ppm	TWA: 200 ppm (vacated) TWA: 100 ppm (vacated) TWA: 375 mg/m³ (vacated) STEL: 150 ppm (vacated) STEL: 560 mg/m³	IDLH: 500 ppm TWA: 100 ppm TWA: 375 mg/m³ STEL: 150 ppm STEL: 560 mg/m³

		Ceiling: 300 ppm	
Mineral Spirits (Stoddard Solvent) 8052-41-3	TWA: 100 ppm	TWA: 500 ppm TWA: 2900 mg/m³ (vacated) TWA: 100 ppm (vacated) TWA: 525 mg/m³	IDLH: 20000 mg/m³ Ceiling: 1800 mg/m³ 15 min TWA: 350 mg/m³
Crystalline Silica (Quartz) 14808-60-7	TWA: 0.025 mg/m³ respirable particulate matter	TWA: 50 µg/m³ TWA: 50 µg/m³ excludes construction work, agricultural operations, and exposures that result from the processing of sorptive clays (vacated) TWA: 0.1 mg/m³ respirable dust : (250)/(%SiO2 + 5) mppcf TWA respirable fraction : (10)/(%SiO2 + 2) mg/m ³ TWA respirable fraction	IDLH: 50 mg/m³ respirable dust TWA: 0.05 mg/m³ respirable dust
Copper Naphthenate 1338-02-9	TWA: 1 mg/m³ Cu dust and mist	-	IDLH: 100 mg/m³ Cu dust and mist TWA: 1 mg/m³ Cu dust and mist

NIOSH IDLH Immediately Dangerous to Life or Health

Other Information Vacated limits revoked by the Court of Appeals decision in AFL-CIO v. OSHA, 965 F.2d 962 (11th Cir., 1992).

Appropriate engineering controls

Engineering Controls Showers
Eyewash stations
Ventilation systems

Individual protection measures, such as personal protective equipment

Eye/face protection Wear safety glasses with side shields (or goggles).

Skin and body protection Wear protective natural rubber, nitrile rubber, Neoprene™ or PVC gloves.

Respiratory protection Use NIOSH-approved air-purifying respirator with organic vapor cartridge or canister, as appropriate.

General Hygiene Considerations Handle in accordance with good industrial hygiene and safety practice. Regular cleaning of equipment, work area and clothing is recommended.

9. PHYSICAL AND CHEMICAL PROPERTIES

9.1. Information on basic physical and chemical properties

Physical state Liquid
Appearance Gray
Odor Aromatic
Odor threshold No information available

Property	Values	Remarks • Method
pH	No information available	
Melting point / freezing point	No information available	
Boiling point / boiling range	56 °C / 133 °F	
Flash point	17 °C / 63 °F	
Evaporation rate	No information available	
Flammability (solid, gas)	No information available	
Flammability Limit in Air		
Upper flammability limit:	No information available	
Lower flammability limit:	No information available	
Vapor pressure	No information available	
Vapor density	No information available	
Relative density	No information available	
Water solubility	No information available	

Solubility(ies)	No information available
Partition coefficient	No information available
Autoignition temperature	No information available
Decomposition temperature	No information available
Kinematic viscosity	No information available
Dynamic viscosity	No information available
Explosive properties	No information available
Oxidizing properties	No information available

Other Information

Softening point	No information available
Molecular weight	No information available
VOC content	Regulatory 1.8 lbs./gal. or 216 g/l. Actual 1.2 lbs./gal. or 144 g/l.
Applied	1.76 lbs/gal or 210.3 g/l.
Packaged	3.02 lbs/gal or 361.8 g/l.
Density	11.03
Bulk density	No information available
SADT (self-accelerating decomposition temperature)	No information available

10. STABILITY AND REACTIVITY

Reactivity
No information available

Chemical stability
Stable under normal conditions

Possibility of Hazardous Reactions
None under normal processing.

Conditions to avoid
Excessive heat.

Incompatible materials
Strong oxidizing agents

Hazardous Decomposition Products
Carbon oxides

11. TOXICOLOGICAL INFORMATION

Information on likely routes of exposure

Inhalation	May cause irritation of respiratory tract.
Eye contact	Contact with eyes may cause irritation. May cause redness and tearing of the eyes.
Skin contact	May cause skin irritation and/or dermatitis.
Ingestion	Ingestion may cause irritation to mucous membranes.

Chemical Name	Oral LD50	Dermal LD50	Inhalation LC50
Styrene 100-42-5	= 1000 mg/kg (Rat)	> 2000 mg/kg (Rat)	= 11.7 mg/L (Rat) 4 h
Acetone 67-64-1	= 5800 mg/kg (Rat)	> 15700 mg/kg (Rabbit)	= 50100 mg/m³ (Rat) 8 h
Titanium Dioxide 13463-67-7	> 10000 mg/kg (Rat)	-	-
Toluene 108-88-3	= 2600 mg/kg (Rat)	= 12000 mg/kg (Rabbit)	= 12.5 mg/L (Rat) 4 h
Naphtha (petroleum), hydrotreated heavy	> 6000 mg/kg (Rat)	> 3160 mg/kg (Rabbit)	> 8500 mg/m³ (Rat) 4 h

64742-48-9			
Copper Naphthenate 1338-02-9	= 2 g/kg (Rat)	> 2000 mg/kg (Rabbit)	-

Information on toxicological effects

Symptoms No information available.

Delayed and immediate effects as well as chronic effects from short and long-term exposure

Sensitization No information available.
Germ cell mutagenicity No information available.
Carcinogenicity The table below indicates whether each agency has listed any ingredient as a carcinogen.

Chemical Name	ACGIH	IARC	NTP	OSHA
Styrene 100-42-5	A3	Group 2A	Reasonably Anticipated	X
Titanium Dioxide 13463-67-7	-	Group 2B	-	X
Talc (hydrous magnesium silicate) 14807-96-6	-	Group 3	-	X
Toluene 108-88-3	-	Group 3	-	-
Crystalline Silica (Quartz) 14808-60-7	A2	Group 1	Known	X
Copper Naphthenate 1338-02-9	-	Group 2A	-	X

ACGIH (American Conference of Governmental Industrial Hygienists)
A2 - Suspected Human Carcinogen
IARC (International Agency for Research on Cancer)
Group 1 - Carcinogenic to Humans
Group 2B - Possibly Carcinogenic to Humans
Not classifiable as a human carcinogen
Group 2A - Probably Carcinogenic to Humans
NTP (National Toxicology Program)
Known - Known Carcinogen
Reasonably Anticipated - Reasonably Anticipated to be a Human Carcinogen
OSHA (Occupational Safety and Health Administration of the US Department of Labor)
X - Present

Chronic toxicity May cause adverse liver effects. Contains a known or suspected reproductive toxin.
Target Organ Effects Central nervous system, Central Vascular System (CVS), Eyes, Liver, Lungs, Reproductive System, Respiratory system, Skin.

The following values are calculated based on chapter 3.1 of the GHS document .
ATEmix (oral) 2071 mg/kg
ATEmix (dermal) 4280 mg/kg
ATEmix (inhalation-dust/mist) 3.5 mg/l

12. ECOLOGICAL INFORMATION

Ecotoxicity

Persistence and degradability
No information available.

Bioaccumulation
No information available.

Mobility
No information available.

Chemical Name	Partition coefficient
Styrene	2.95

100-42-5	
Acetone 67-64-1	-0.24
Toluene 108-88-3	2.7

Other adverse effects
No information available

13. DISPOSAL CONSIDERATIONS

Waste treatment methods

Disposal of wastes This material, as supplied, is a hazardous waste according to federal regulations (40 CFR 261).

Contaminated packaging Do not reuse container.

US EPA Waste Number D001

Chemical Name	RCRA - Halogenated Organic Compounds	RCRA - P Series Wastes	RCRA - F Series Wastes	RCRA - K Series Wastes
Toluene 108-88-3	-	-	Toxic waste waste number F025 Waste description: Condensed light ends, spent filters and filter aids, and spent desiccant wastes from the production of certain chlorinated aliphatic hydrocarbons, by free radical catalyzed processes. These chlorinated aliphatic hydrocarbons are those having carbon chain lengths ranging from one to and including five, with varying amounts and positions of chlorine substitution.	-

This product contains one or more substances that are listed with the State of California as a hazardous waste.

Chemical Name	California Hazardous Waste Status
Styrene 100-42-5	Toxic Ignitable
Acetone 67-64-1	Ignitable
Toluene 108-88-3	Toxic Ignitable
Copper Naphthenate 1338-02-9	Toxic

14. TRANSPORT INFORMATION

Note: This information is not intended to convey all specific regulatory information relating to this product. Transportation classifications may vary by container volume and may be influenced by regional or country variations in regulations. It is the responsibility of the transporting organization to follow all applicable laws, regulations and rules relating to the transportation of the material.

DOT

UN/ID No UN1263
Proper shipping name Paint
Hazard Class 3
Packing Group II

IATA

UN/ID No	UN1263
Proper shipping name	Paint
Hazard Class	3
Packing Group	II

IMDG

UN/ID No	UN1263
Proper shipping name	Paint
Hazard Class	3
Packing Group	II

15. REGULATORY INFORMATION

International Inventories

TSCA	Complies
DSL/NDSL	Complies
EINECS/ELINCS	Complies
ENCS	Complies
IECSC	Complies
KECL	Complies
PICCS	Complies
AICS	Complies

Legend:

TSCA - United States Toxic Substances Control Act Section 8(b) Inventory
DSL/NDSL - Canadian Domestic Substances List/Non-Domestic Substances List
EINECS/ELINCS - European Inventory of Existing Chemical Substances/European List of Notified Chemical Substances
ENCS - Japan Existing and New Chemical Substances
IECSC - China Inventory of Existing Chemical Substances
KECL - Korean Existing and Evaluated Chemical Substances
PICCS - Philippines Inventory of Chemicals and Chemical Substances
AICS - Australian Inventory of Chemical Substances

US Federal Regulations

SARA 313

Section 313 of Title III of the Superfund Amendments and Reauthorization Act of 1986 (SARA). This product contains a chemical or chemicals which are subject to the reporting requirements of the Act and Title 40 of the Code of Federal Regulations, Part 372

Chemical Name	SARA 313 - Threshold Values %
Styrene - 100-42-5	0.1
Naphthalene - 91-20-3	0.1
Ethyl Benzene - 100-41-4	0.1

SARA 311/312 Hazard Categories

Acute health hazard	No
Chronic Health Hazard	No
Fire hazard	Yes
Sudden release of pressure hazard	No
Reactive Hazard	No

CWA (Clean Water Act)

This product contains the following substances which are regulated pollutants pursuant to the Clean Water Act (40 CFR 122.21 and 40 CFR 122.42)

Chemical Name	CWA - Reportable Quantities	CWA - Toxic Pollutants	CWA - Priority Pollutants	CWA - Hazardous Substances
Styrene 100-42-5	1000 lb	-	-	X
Toluene 108-88-3	1000 lb	X	X	X
Copper Naphthenate	-	X	-	-

1338-02-9				

CERCLA

This material, as supplied, contains one or more substances regulated as a hazardous substance under the Comprehensive Environmental Response Compensation and Liability Act (CERCLA) (40 CFR 302)

Chemical Name	Hazardous Substances RQs	CERCLA/SARA RQ	Reportable Quantity (RQ)
Styrene 100-42-5	1000 lb	-	RQ 1000 lb final RQ RQ 454 kg final RQ
Acetone 67-64-1	5000 lb	-	RQ 5000 lb final RQ RQ 2270 kg final RQ
Toluene 108-88-3	1000 lb 1 lb	-	RQ 1000 lb final RQ RQ 454 kg final RQ RQ 1 lb final RQ RQ 0.454 kg final RQ

US State Regulations

California Proposition 65

This product contains the following Proposition 65 chemicals

Chemical Name	California Proposition 65
Styrene 100-42-5	Carcinogen
Titanium Dioxide 13463-67-7	Carcinogen
Toluene 108-88-3	Developmental
Crystalline Silica (Quartz) 14808-60-7	Carcinogen
Synthetic Amorphous Crystalline-Free Silica 7631-86-9	Carcinogen
Naphthalene 91-20-3	Carcinogen
Ethyl Benzene 100-41-4	Carcinogen
1,2- BENZENEDICARBOXYLIC ACID, DI-C8-10- BRANCHED ALKYL ESTERS, C9-RICH 68515-48-0	Carcinogen

U.S. State Right-to-Know Regulations

Chemical Name	New Jersey	Massachusetts	Pennsylvania
Styrene 100-42-5	X	X	X
Acetone 67-64-1	X	X	X
Titanium Dioxide 13463-67-7	X	X	X
Talc (hydrous magnesium silicate) 14807-96-6	X	X	X
Toluene 108-88-3	X	X	X
Butyl Alcohol 78-92-2	X	X	X
Crystalline Silica (Quartz) 14808-60-7	X	X	X
Naphthalene 91-20-3	X	X	X
Ethyl Benzene 100-41-4	X	X	X
1,2- BENZENEDICARBOXYLIC ACID, DI-C8-10- BRANCHED ALKYL ESTERS, C9-RICH 68515-48-0	-	-	X
Ferric oxide 1309-37-1	X	X	X

U.S. EPA Label Information

EPA Pesticide Registration Number Not applicable

WHMIS Hazard Class
B2 - Flammable liquid, D2A - Very toxic materials

16. OTHER INFORMATION, INCLUDING DATE OF PREPARATION OF THE LAST REVISION

NFPA	**Health hazards**	2	**Flammability**	3	**Instability**	0	-
HMIS	**Health hazards**	2	**Flammability**	3	**Physical hazards**	0	**Personal protection** B

NFPA (National Fire Protection Association)
HMIS (Hazardous Material Information System)

Revision Date 03-Mar-2021

Disclaimer
Illinois Tool Works Inc. believes the information contained in this data sheet is accurate as of the date compiled. However, Illinois Tool Works Inc. makes no warranty, express or implied, as to the accuracy, reliability or completeness of the information. User is responsible for evaluating whether such information or this product is fit for a particular purpose and suitable for a particular use or application. The information in this data sheet may not be valid if this product is used in combination with other products or in processes for which it was not designed. Illinois Tool Works Inc. disclaims any liability for consequential or incidental damages of any kind, including lost profits, arising from the sale or use of this product. Ensure you have the most current version of this data sheet by contacting us or reviewing our web site.

End of Safety Data Sheet

Safety Data Sheet

Copyright,2019,3M Company.
All rights reserved. Copying and/or downloading of this information for the purpose of properly utilizing 3M products is allowed provided that: (1) the information is copied in full with no changes unless prior written agreement is obtained from 3M, and (2) neither the copy nor the original is resold or otherwise distributed with the intention of earning a profit thereon.

Document Group:	18-0209-9	**Version Number:**	9.06
Issue Date:	03/12/19	**Supercedes Date:**	01/14/19

SECTION 1: Identification

1.1. Product identifier
3M™ Polyolefin Adhesion Promoter, PN 05907

Product Identification Numbers
LB-K100-0329-6, 60-4551-0251-1, 60-9800-4515-1
7000000628, 7000120488, 7100198814

1.2. Recommended use and restrictions on use

Recommended use
Adhesive, To promote adhesion of paint and repair materials to polyolefin type plastics.

1.3. Supplier's details

MANUFACTURER:	3M
DIVISION:	Automotive Aftermarket
ADDRESS:	3M Center, St. Paul, MN 55144-1000, USA
Telephone:	1-888-3M HELPS (1-888-364-3577)

1.4. Emergency telephone number
1-800-364-3577 or (651) 737-6501 (24 hours)

SECTION 2: Hazard identification

The label elements below were prepared in accordance with OSHA Hazard Communication Standard, 29 CFR 1910.1200. This information may be different from the actual product label information for labels regulated by other agencies.

2.1. Hazard classification
Flammable Aerosol: Category 1.
Gas Under Pressure: Liquefied gas.
Serious Eye Damage/Irritation: Category 2A.
Skin Corrosion/Irritation: Category 2.
Aspiration Hazard: Category 1.
Reproductive Toxicity: Category 1B.
Simple Asphyxiant.
Specific Target Organ Toxicity (single exposure): Category 1.
Specific Target Organ Toxicity (single exposure): Category 3.

Specific Target Organ Toxicity (repeated exposure): Category 1.

2.2. Label elements
Signal word
Danger

Symbols
Flame | Gas cylinder | Exclamation mark | Health Hazard |

Pictograms

Hazard Statements
Extremely flammable aerosol.
Contains gas under pressure; may explode if heated.

Causes serious eye irritation.
Causes skin irritation.
May be fatal if swallowed and enters airways.
May cause drowsiness or dizziness.
May damage fertility or the unborn child.
May displace oxygen and cause rapid suffocation.

Causes damage to organs:
cardiovascular system |

Causes damage to organs through prolonged or repeated exposure:
nervous system |
sensory organs |

Precautionary Statements
General:
Keep out of reach of children.

Prevention:
Obtain special instructions before use.
Do not handle until all safety precautions have been read and understood.
Keep away from heat/sparks/open flames/hot surfaces. - No smoking.
Do not spray on an open flame or other ignition source.
Pressurized container: Do not pierce or burn, even after use.
Do not breathe dust/fume/gas/mist/vapors/spray.
Use only outdoors or in a well-ventilated area.
Wear protective gloves and eye/face protection.
Do not eat, drink or smoke when using this product.
Wash thoroughly after handling.

Response:
IF INHALED: Remove person to fresh air and keep comfortable for breathing.
IF IN EYES: Rinse cautiously with water for several minutes. Remove contact lenses, if present and easy to do. Continue rinsing.
If eye irritation persists: Get medical advice/attention.

IF ON SKIN: Wash with plenty of soap and water.
If skin irritation occurs: Get medical advice/attention.
Take off contaminated clothing and wash it before reuse.
Do NOT induce vomiting.
IF SWALLOWED: Immediately call a POISON CENTER or doctor/physician.
Specific treatment (see Notes to Physician on this label).
Call a POISON CENTER or doctor/physician if you feel unwell.

Storage:
Protect from sunlight. Do not expose to temperatures exceeding 50C/122F.
Store in a well-ventilated place. Keep container tightly closed.
Store locked up.

Disposal:
Dispose of contents/container in accordance with applicable local/regional/national/international regulations.

Notes to Physician:
Exposure may increase myocardial irritability. Do not administer sympathomimetic drugs unless absolutely necessary.

Supplemental Information:
Intentional concentration and inhalation may be harmful or fatal.

29% of the mixture consists of ingredients of unknown acute oral toxicity.

3% of the mixture consists of ingredients of unknown acute inhalation toxicity.

SECTION 3: Composition/information on ingredients

Ingredient	C.A.S. No.	% by Wt
Toluene	108-88-3	30 - 60 Trade Secret *
Acetone	67-64-1	10 - 30 Trade Secret *
Propane	74-98-6	10 - 30 Trade Secret *
Isobutane	75-28-5	7 - 13 Trade Secret *
Modified Chlorinated Polyolefin	Trade Secret*	1 - 5 Trade Secret *

*The specific chemical identity and/or exact percentage (concentration) of this composition has been withheld as a trade secret.

SECTION 4: First aid measures

4.1. Description of first aid measures

Inhalation:
Remove person to fresh air. Get medical attention.

Skin Contact:
Immediately wash with soap and water. Remove contaminated clothing and wash before reuse. If signs/symptoms develop, get medical attention.

Eye Contact:
Immediately flush with large amounts of water. Remove contact lenses if easy to do. Continue rinsing. Get medical attention.

If Swallowed:

Do not induce vomiting. Get immediate medical attention.

4.2. Most important symptoms and effects, both acute and delayed
See Section 11.1. Information on toxicological effects.

4.3. Indication of any immediate medical attention and special treatment required
Exposure may increase myocardial irritability. Do not administer sympathomimetic drugs unless absolutely necessary.

SECTION 5: Fire-fighting measures

5.1. Suitable extinguishing media
Use a fire fighting agent suitable for the surrounding fire.

5.2. Special hazards arising from the substance or mixture
Closed containers exposed to heat from fire may build pressure and explode.

5.3. Special protective actions for fire-fighters
Water may not effectively extinguish fire; however, it should be used to keep fire-exposed containers and surfaces cool and prevent explosive rupture.

SECTION 6: Accidental release measures

6.1. Personal precautions, protective equipment and emergency procedures
Evacuate area. Keep away from heat/sparks/open flames/hot surfaces. - No smoking. Use only non-sparking tools. Ventilate the area with fresh air. For large spill, or spills in confined spaces, provide mechanical ventilation to disperse or exhaust vapors, in accordance with good industrial hygiene practice. Warning! A motor could be an ignition source and could cause flammable gases or vapors in the spill area to burn or explode. Refer to other sections of this SDS for information regarding physical and health hazards, respiratory protection, ventilation, and personal protective equipment.

6.2. Environmental precautions
For larger spills, cover drains and build dikes to prevent entry into sewer systems or bodies of water.

6.3. Methods and material for containment and cleaning up
If possible, seal leaking container. Place leaking containers in a well-ventilated area, preferably an operating exhaust hood, or if necessary outdoors on an impermeable surface until appropriate packaging for the leaking container or its contents is available. Contain spill. Cover spill area with a fire-extinguishing foam designed for use on solvents, such as alcohols and acetone, that can dissolve in water. An AR - AFFF type foam is recommended. Working from around the edges of the spill inward, cover with bentonite, vermiculite, or commercially available inorganic absorbent material. Mix in sufficient absorbent until it appears dry. Remember, adding an absorbent material does not remove a physical, health, or environmental hazard. Collect as much of the spilled material as possible using non-sparking tools. Place in a metal container approved for transportation by appropriate authorities. Clean up residue with detergent and water. Seal the container. Dispose of collected material as soon as possible in accordance with applicable local/regional/national/international regulations.

SECTION 7: Handling and storage

7.1. Precautions for safe handling
Do not use in a confined area with minimal air exchange. Keep out of reach of children. Do not handle until all safety precautions have been read and understood. Keep away from heat/sparks/open flames/hot surfaces. - No smoking. Do not spray on an open flame or other ignition source. Do not pierce or burn, even after use. Do not breathe dust/fume/gas/mist/vapors/spray. Do not get in eyes, on skin, or on clothing. Do not eat, drink or smoke when using this product. Wash thoroughly after handling. Avoid contact with oxidizing agents (eg. chlorine, chromic acid etc.) Use personal protective equipment (gloves, respirators, etc.) as required.

7.2. Conditions for safe storage including any incompatibilities
Store in a well-ventilated place. Keep container tightly closed. Protect from sunlight. Do not expose to temperatures exceeding 50C/122F. Store away from heat. Store away from acids. Store away from oxidizing agents.

SECTION 8: Exposure controls/personal protection

8.1. Control parameters

Occupational exposure limits
If a component is disclosed in section 3 but does not appear in the table below, an occupational exposure limit is not available for the component.

Ingredient	C.A.S. No.	Agency	Limit type	Additional Comments
Toluene	108-88-3	ACGIH	TWA:20 ppm	A4: Not class. as human carcin
Toluene	108-88-3	OSHA	TWA:200 ppm;CEIL:300 ppm	
Acetone	67-64-1	ACGIH	TWA:250 ppm;STEL:500 ppm	A4: Not class. as human carcin
Acetone	67-64-1	OSHA	TWA:2400 mg/m3(1000 ppm)	
Propane	74-98-6	ACGIH	Limit value not established:	simple asphyxiant
Propane	74-98-6	OSHA	TWA:1800 mg/m3(1000 ppm)	
Isobutane	75-28-5	ACGIH	STEL:1000 ppm	
Natural gas	75-28-5	ACGIH	Limit value not established:	simple asphyxiant

ACGIH : American Conference of Governmental Industrial Hygienists
AIHA : American Industrial Hygiene Association
CMRG : Chemical Manufacturer's Recommended Guidelines
OSHA : United States Department of Labor - Occupational Safety and Health Administration
TWA: Time-Weighted-Average
STEL: Short Term Exposure Limit
CEIL: Ceiling

8.2. Exposure controls

8.2.1. Engineering controls
Do not remain in area where available oxygen may be reduced. Use general dilution ventilation and/or local exhaust ventilation to control airborne exposures to below relevant Exposure Limits and/or control dust/fume/gas/mist/vapors/spray. If ventilation is not adequate, use respiratory protection equipment.

8.2.2. Personal protective equipment (PPE)

Eye/face protection

Select and use eye/face protection to prevent contact based on the results of an exposure assessment. The following eye/face protection(s) are recommended:
Indirect Vented Goggles

Skin/hand protection
Select and use gloves and/or protective clothing approved to relevant local standards to prevent skin contact based on the results of an exposure assessment. Selection should be based on use factors such as exposure levels, concentration of the substance or mixture, frequency and duration, physical challenges such as temperature extremes, and other use conditions. Consult with your glove and/or protective clothing manufacturer for selection of appropriate compatible gloves/protective clothing. Note: Nitrile gloves may be worn over polymer laminate gloves to improve dexterity.
Gloves made from the following material(s) are recommended: Fluoroelastomer
Polymer laminate

Respiratory protection

An exposure assessment may be needed to decide if a respirator is required. If a respirator is needed, use respirators as part of a full respiratory protection program. Based on the results of the exposure assessment, select from the following respirator type(s) to reduce inhalation exposure:
Half facepiece or full facepiece air-purifying respirator suitable for organic vapors
Organic vapor respirators may have short service life.

For questions about suitability for a specific application, consult with your respirator manufacturer.

SECTION 9: Physical and chemical properties

9.1. Information on basic physical and chemical properties

General Physical Form:	Liquid
Specific Physical Form:	Aerosol
Odor, Color, Grade:	Liquid in aerosol container, very light yellow, aromatic hydrocarbon odor
Odor threshold	*No Data Available*
pH	*Not Applicable*
Melting point	*Not Applicable*
Boiling Point	*No Data Available*
Flash Point	-120 °F [*Test Method:*Estimated] [*Details:*Based on propellant]
Evaporation rate	>=1 [*Ref Std:*BUOAC=1]
Flammability (solid, gas)	Not Applicable
Flammable Limits(LEL)	1.4 %
Flammable Limits(UEL)	8.2 %
Vapor Pressure	Nil [*Details:*Compressed gas]
Vapor Density	>=1 [*Ref Std:*AIR=1]
Density	6.2 lb/gal
Specific Gravity	0.739 [*Ref Std:*WATER=1]
Solubility in Water	Moderate
Solubility- non-water	*No Data Available*
Partition coefficient: n-octanol/ water	*No Data Available*
Autoignition temperature	*No Data Available*
Decomposition temperature	*No Data Available*
Viscosity	*No Data Available*
Hazardous Air Pollutants	18.2 lb HAPS/lb solids [*Test Method:*Calculated]
Molecular weight	*No Data Available*
Volatile Organic Compounds	80.8 % weight [*Test Method:*calculated per CARB title 2]
Volatile Organic Compounds	597 g/l [*Test Method:*calculated SCAQMD rule 443.1]
Percent volatile	97.1 % weight
VOC Less H2O & Exempt Solvents	705 g/l [*Test Method:*calculated SCAQMD rule 443.1]

SECTION 10: Stability and reactivity

10.1. Reactivity
This material may be reactive with certain agents under certain conditions - see the remaining headings in this section.

10.2. Chemical stability
Stable.

10.3. Possibility of hazardous reactions
Hazardous polymerization will not occur.

10.4. Conditions to avoid
Heat

10.5. Incompatible materials
Strong acids

10.6. Hazardous decomposition products

Substance	Condition
Carbon monoxide	Not Specified
Carbon dioxide	Not Specified
Toxic Vapor, Gas, Particulate	Not Specified

SECTION 11: Toxicological information

The information below may not be consistent with the material classification in Section 2 if specific ingredient classifications are mandated by a competent authority. In addition, toxicological data on ingredients may not be reflected in the material classification and/or the signs and symptoms of exposure, because an ingredient may be present below the threshold for labeling, an ingredient may not be available for exposure, or the data may not be relevant to the material as a whole.

11.1. Information on Toxicological effects

Signs and Symptoms of Exposure

Based on test data and/or information on the components, this material may produce the following health effects:

Inhalation:
Simple Asphyxiation: Signs/symptoms may include increased heart rate, rapid respirations, drowsiness, headache, incoordination, altered judgement, nausea, vomiting, lethargy, seizures, coma, and may be fatal.

Respiratory Tract Irritation: Signs/symptoms may include cough, sneezing, nasal discharge, headache, hoarseness, and nose and throat pain.

May cause additional health effects (see below).

Skin Contact:
Skin Irritation: Signs/symptoms may include localized redness, swelling, itching, dryness, cracking, blistering, and pain.

Eye Contact:
Severe Eye Irritation: Signs/symptoms may include significant redness, swelling, pain, tearing, cloudy appearance of the cornea, and impaired vision.

Ingestion:
Chemical (Aspiration) Pneumonitis: Signs/symptoms may include coughing, gasping, choking, burning of the mouth, difficulty breathing, bluish colored skin (cyanosis), and may be fatal.

Gastrointestinal Irritation: Signs/symptoms may include abdominal pain, stomach upset, nausea, vomiting and diarrhea.

May cause additional health effects (see below).

Additional Health Effects:

Single exposure may cause target organ effects:
Central Nervous System (CNS) Depression: Signs/symptoms may include headache, dizziness, drowsiness, incoordination, nausea, slowed reaction time, slurred speech, giddiness, and unconsciousness.

Cardiac Sensitization: Signs/symptoms may include irregular heartbeat (arrhythmia), faintness, chest pain, and may be fatal.

Prolonged or repeated exposure may cause target organ effects:
Ocular Effects: Signs/symptoms may include blurred or significantly impaired vision.

Auditory Effects: Signs/symptoms may include hearing impairment, balance dysfunction and ringing in the ears.

Olfactory Effects: Signs/symptoms may include decreased ability to detect odors and/or complete loss of smell.

Neurological Effects: Signs/symptoms may include personality changes, lack of coordination, sensory loss, tingling or numbness of the extremities, weakness, tremors, and/or changes in blood pressure and heart rate.

Reproductive/Developmental Toxicity:
Contains a chemical or chemicals which can cause birth defects or other reproductive harm.

Toxicological Data
If a component is disclosed in section 3 but does not appear in a table below, either no data are available for that endpoint or the data are not sufficient for classification.

Acute Toxicity

Name	Route	Species	Value
Overall product	Inhalation-Vapor(4 hr)		No data available; calculated ATE >50 mg/l
Overall product	Ingestion		No data available; calculated ATE >5,000 mg/kg
Toluene	Dermal	Rat	LD50 12,000 mg/kg
Toluene	Inhalation-Vapor (4 hours)	Rat	LC50 30 mg/l
Toluene	Ingestion	Rat	LD50 5,550 mg/kg
Propane	Inhalation-Gas (4 hours)	Rat	LC50 > 200,000 ppm
Acetone	Dermal	Rabbit	LD50 > 15,688 mg/kg
Acetone	Inhalation-Vapor (4 hours)	Rat	LC50 76 mg/l
Acetone	Ingestion	Rat	LD50 5,800 mg/kg
Isobutane	Inhalation-Gas (4 hours)	Rat	LC50 276,000 ppm

ATE = acute toxicity estimate

Skin Corrosion/Irritation

Name	Species	Value
Toluene	Rabbit	Irritant
Propane	Rabbit	Minimal irritation
Acetone	Mouse	Minimal irritation
Isobutane	Professional judgement	No significant irritation

Serious Eye Damage/Irritation

Name	Species	Value
Toluene	Rabbit	Moderate irritant
Propane	Rabbit	Mild irritant
Acetone	Rabbit	Severe irritant

Isobutane	Professional judgement	No significant irritation

Skin Sensitization

Name	Species	Value
Toluene	Guinea pig	Not classified

Respiratory Sensitization

For the component/components, either no data are currently available or the data are not sufficient for classification.

Germ Cell Mutagenicity

Name	Route	Value
Toluene	In Vitro	Not mutagenic
Toluene	In vivo	Not mutagenic
Propane	In Vitro	Not mutagenic
Acetone	In vivo	Not mutagenic
Acetone	In Vitro	Some positive data exist, but the data are not sufficient for classification
Isobutane	In Vitro	Not mutagenic

Carcinogenicity

Name	Route	Species	Value
Toluene	Dermal	Mouse	Some positive data exist, but the data are not sufficient for classification
Toluene	Ingestion	Rat	Some positive data exist, but the data are not sufficient for classification
Toluene	Inhalation	Mouse	Some positive data exist, but the data are not sufficient for classification
Acetone	Not Specified	Multiple animal species	Not carcinogenic

Reproductive Toxicity

Reproductive and/or Developmental Effects

Name	Route	Value	Species	Test Result	Exposure Duration
Toluene	Inhalation	Not classified for female reproduction	Human	NOAEL Not available	occupational exposure
Toluene	Inhalation	Not classified for male reproduction	Rat	NOAEL 2.3 mg/l	1 generation
Toluene	Ingestion	Toxic to development	Rat	LOAEL 520 mg/kg/day	during gestation
Toluene	Inhalation	Toxic to development	Human	NOAEL Not available	poisoning and/or abuse
Acetone	Ingestion	Not classified for male reproduction	Rat	NOAEL 1,700 mg/kg/day	13 weeks
Acetone	Inhalation	Not classified for development	Rat	NOAEL 5.2 mg/l	during organogenesis

Target Organ(s)

Specific Target Organ Toxicity - single exposure

Name	Route	Target Organ(s)	Value	Species	Test Result	Exposure Duration
Toluene	Inhalation	central nervous system depression	May cause drowsiness or dizziness	Human	NOAEL Not available	

Toluene	Inhalation	respiratory irritation	Some positive data exist, but the data are not sufficient for classification	Human	NOAEL Not available	
Toluene	Inhalation	immune system	Not classified	Mouse	NOAEL 0.004 mg/l	3 hours
Toluene	Ingestion	central nervous system depression	May cause drowsiness or dizziness	Human	NOAEL Not available	poisoning and/or abuse
Propane	Inhalation	cardiac sensitization	Causes damage to organs	Human	NOAEL Not available	
Propane	Inhalation	central nervous system depression	May cause drowsiness or dizziness	Human	NOAEL Not available	
Propane	Inhalation	respiratory irritation	Not classified	Human	NOAEL Not available	
Acetone	Inhalation	central nervous system depression	May cause drowsiness or dizziness	Human	NOAEL Not available	
Acetone	Inhalation	respiratory irritation	Some positive data exist, but the data are not sufficient for classification	Human	NOAEL Not available	
Acetone	Inhalation	immune system	Not classified	Human	NOAEL 1.19 mg/l	6 hours
Acetone	Inhalation	liver	Not classified	Guinea pig	NOAEL Not available	
Acetone	Ingestion	central nervous system depression	May cause drowsiness or dizziness	Human	NOAEL Not available	poisoning and/or abuse
Isobutane	Inhalation	cardiac sensitization	Causes damage to organs	Multiple animal species	NOAEL Not available	
Isobutane	Inhalation	central nervous system depression	May cause drowsiness or dizziness	Human and animal	NOAEL Not available	
Isobutane	Inhalation	respiratory irritation	Not classified	Mouse	NOAEL Not available	

Specific Target Organ Toxicity - repeated exposure

Name	Route	Target Organ(s)	Value	Species	Test Result	Exposure Duration
Toluene	Inhalation	auditory system | nervous system | eyes | olfactory system	Causes damage to organs through prolonged or repeated exposure	Human	NOAEL Not available	poisoning and/or abuse
Toluene	Inhalation	respiratory system	Some positive data exist, but the data are not sufficient for classification	Rat	LOAEL 2.3 mg/l	15 months
Toluene	Inhalation	heart | liver | kidney and/or bladder	Not classified	Rat	NOAEL 11.3 mg/l	15 weeks
Toluene	Inhalation	endocrine system	Not classified	Rat	NOAEL 1.1 mg/l	4 weeks
Toluene	Inhalation	immune system	Not classified	Mouse	NOAEL Not available	20 days
Toluene	Inhalation	bone, teeth, nails, and/or hair	Not classified	Mouse	NOAEL 1.1 mg/l	8 weeks
Toluene	Inhalation	hematopoietic system | vascular system	Not classified	Human	NOAEL Not available	occupational exposure
Toluene	Inhalation	gastrointestinal tract	Not classified	Multiple animal species	NOAEL 11.3 mg/l	15 weeks
Toluene	Ingestion	nervous system	Some positive data exist, but the data are not sufficient for classification	Rat	NOAEL 625 mg/kg/day	13 weeks
Toluene	Ingestion	heart	Not classified	Rat	NOAEL 2,500 mg/kg/day	13 weeks
Toluene	Ingestion	liver | kidney and/or bladder	Not classified	Multiple animal species	NOAEL 2,500 mg/kg/day	13 weeks
Toluene	Ingestion	hematopoietic	Not classified	Mouse	NOAEL 600	14 days

		system			mg/kg/day	
Toluene	Ingestion	endocrine system	Not classified	Mouse	NOAEL 105 mg/kg/day	28 days
Toluene	Ingestion	immune system	Not classified	Mouse	NOAEL 105 mg/kg/day	4 weeks
Acetone	Dermal	eyes	Not classified	Guinea pig	NOAEL Not available	3 weeks
Acetone	Inhalation	hematopoietic system	Not classified	Human	NOAEL 3 mg/l	6 weeks
Acetone	Inhalation	immune system	Not classified	Human	NOAEL 1.19 mg/l	6 days
Acetone	Inhalation	kidney and/or bladder	Not classified	Guinea pig	NOAEL 119 mg/l	not available
Acetone	Inhalation	heart | liver	Not classified	Rat	NOAEL 45 mg/l	8 weeks
Acetone	Ingestion	kidney and/or bladder	Not classified	Rat	NOAEL 900 mg/kg/day	13 weeks
Acetone	Ingestion	heart	Not classified	Rat	NOAEL 2,500 mg/kg/day	13 weeks
Acetone	Ingestion	hematopoietic system	Not classified	Rat	NOAEL 200 mg/kg/day	13 weeks
Acetone	Ingestion	liver	Not classified	Mouse	NOAEL 3,896 mg/kg/day	14 days
Acetone	Ingestion	eyes	Not classified	Rat	NOAEL 3,400 mg/kg/day	13 weeks
Acetone	Ingestion	respiratory system	Not classified	Rat	NOAEL 2,500 mg/kg/day	13 weeks
Acetone	Ingestion	muscles	Not classified	Rat	NOAEL 2,500 mg/kg	13 weeks
Acetone	Ingestion	skin | bone, teeth, nails, and/or hair	Not classified	Mouse	NOAEL 11,298 mg/kg/day	13 weeks
Isobutane	Inhalation	kidney and/or bladder	Not classified	Rat	NOAEL 4,500 ppm	13 weeks

Aspiration Hazard

Name	Value
Toluene	Aspiration hazard

Please contact the address or phone number listed on the first page of the SDS for additional toxicological information on this material and/or its components.

SECTION 12: Ecological information

Ecotoxicological information

Please contact the address or phone number listed on the first page of the SDS for additional ecotoxicological information on this material and/or its components.

Chemical fate information

Please contact the address or phone number listed on the first page of the SDS for additional chemical fate information on this material and/or its components.

SECTION 13: Disposal considerations

13.1. Disposal methods

Dispose of contents/ container in accordance with the local/regional/national/international regulations.

Incinerate in a permitted waste incineration facility. Facility must be capable of handling aerosol cans. Empty drums/barrels/containers used for transporting and handling hazardous chemicals (chemical substances/mixtures/preparations classified as Hazardous as per applicable regulations) shall be considered, stored, treated & disposed of as hazardous wastes unless otherwise defined by applicable waste regulations. Consult with the respective regulating authorities to determine the available treatment and disposal facilities.

SECTION 14: Transport Information

For Transport Information, please visit http://3M.com/Transportinfo or call 1-800-364-3577 or 651-737-6501.

SECTION 15: Regulatory information

15.1. US Federal Regulations

Contact 3M for more information.

EPCRA 311/312 Hazard Classifications:

Physical Hazards
Flammable (gases, aerosols, liquids, or solids)
Gas under pressure

Health Hazards
Aspiration Hazard
Reproductive toxicity
Serious eye damage or eye irritation
Simple Asphyxiant
Skin Corrosion or Irritation
Specific target organ toxicity (single or repeated exposure)

Section 313 Toxic Chemicals subject to the reporting requirements of that section and 40 CFR part 372 (EPCRA):

Ingredient	C.A.S. No	% by Wt
Toluene	108-88-3	Trade Secret 30 - 60

15.2. State Regulations

Contact 3M for more information.

15.3. Chemical Inventories

The components of this product are in compliance with the chemical notification requirements of TSCA. All required components of this product are listed on the active portion of the TSCA Inventory.

Contact 3M for more information.

15.4. International Regulations

Contact 3M for more information.

This SDS has been prepared to meet the U.S. OSHA Hazard Communication Standard, 29 CFR 1910.1200.

SECTION 16: Other information

NFPA Hazard Classification
Health: 2 **Flammability:** 4 **Instability:** 0 **Special Hazards:** None
Aerosol Storage Code: 3

National Fire Protection Association (NFPA) hazard ratings are designed for use by emergency response personnel to address the hazards that are presented by short-term, acute exposure to a material under conditions of fire, spill, or similar emergencies. Hazard ratings are primarily based on the inherent physical and toxic properties of the material but also include the toxic properties of combustion or decomposition products that are known to be generated in significant quantities.

Document Group:	18-0209-9	**Version Number:**	9.06
Issue Date:	03/12/19	**Supercedes Date:**	01/14/19

DISCLAIMER: The information in this Safety Data Sheet (SDS) is believed to be correct as of the date issued.3MMAKES NO WARRANTIES, EXPRESSED OR IMPLIED, INCLUDING, BUT NOT LIMITED TO, ANY IMPLIED WARRANTY OF MERCHANTABILITY OR FITNESS FOR A PARTICULAR PURPOSE OR COURSE OF PERFORMANCE OR USAGE OF TRADE.User is responsible for determining whether the3Mproduct is fit for a particular purpose and suitable for user's method of use or application.Given the variety of factors that can affect the use and application of a3Mproduct, some of which are uniquely within the user's knowledge and control,it is essential that the user evaluate the3Mproduct to determine whether it is fit for a particular purpose and suitable for user's method of use or application.

3Mprovides information in electronic form as a service to its customers. Due to the remote possibility that electronic transfer may have resulted in errors, omissions or alterations in this information,3Mmakes no representations as to its completeness or accuracy. In addition, information obtained from a database may not be as current as the information in the SDS available directly from3M

3M USA SDSs are available at www.3M.com

TDS

3M

Polyolefin Adhesion Promoter
05907

Technical Data July 2017

Product Description

A specially designed adhesion promoter for use when repairing low surface energy plastics such as thermopolyolefin (TPO). 3M™ Polyolefin Adhesion Promoter is designed to be used in conjunction with 3M adhesives; refer to specific adhesive product Directions For Use. **Do Not** use on sheet molded compound (SMC) and fiberglass reinforced polyester (FRP) repairs.

Features

- Increases adhesion of 3M™ two-part adhesives to low surface energy plastics
- Simple aerosol application

Typical Physical Properties

Note: The following technical information and data should be considered representative or typical only and should not be used for specification purposes.

Container	12 oz. Aerosol Spray Can
Base	Chlorinated polyolefin
Density lbs/Gallon (Appx.)	6.2 lb/gal
Color	Clear
Flash Point - °F	-156°F
VOC	81%
Solids Content (Appx.)	0%
Consistency	Aerosol
Solvent	Toluene and Acetone
Service Temperature - °F	-20° to 180°F
Propellant	Propane and Isobutane
Flammable Limits - LEL	1.4%
Flammable Limits - UEL	8.2%

Product Uses

To promote the adhesion of two-part adhesive repair materials to thermopolyolefin type and other low surface energy plastics.

For professional use only. Not intended for retail sale.

3M™ Polyolefin Adhesion Promoter
05907

Typical Performance Properties	**Note: The following technical information and data should be considered representative or typical only and should not be used for specification purposes.** **Dry time:** 5 minutes @ 70°F
Directions for Use	1. Apply one light coat over a sanded surface and allow to dry for 5 minutes. 2. Complete next steps in repair process (refer to adhesive materials for specific directions for use). 3. If repair surface becomes contaminated or if adhesive is not applied within 24 hours, re-sand the surface and apply fresh adhesion promoter.
Applications	See "Product Uses" above.
Storage and Handling	**HANDLING** Avoid eye contact with vapors, mists, or spray. Avoid breathing of vapors, mists or spray. Do not eat, drink or smoke when using this product. Wash exposed areas thoroughly with soap and water. Aerosol container contains flammable gas under pressure. Keep away from heat, sparks, open flame, pilot lights and other sources of ignition. Do not spray near flames or sources of ignition. Avoid static discharge. Ground containers securely when transferring contents. .Wear low static or properly grounded shoes. Do not pierce or burn container, even after use. Avoid contact with oxidizing agents. For industrial or professional use only. Keep out of the reach of children. **STORAGE** When stored at the recommended conditions in original, unopened containers, this product has a shelf of 36 months from the date of manufacture. Store away from acids and oxidizing agents. Store away from heat. Store out of direct sunlight. Keep container tightly closed. Do not store containers on their sides.

3M™ Polyolefin Adhesion Promoter
05907

Precautionary Information	Before using this product, please reference Product Label and/or Safety Data Sheet for Health and Safety Information. Note: Laws controlling the acceptable amounts of Volatile Organic Compounds (VOC's) vary by state, and in some cases by locality. For surface preparation and clean-up activities, consult federal, state and local regulations regarding use of products containing VOCs in your area.
Technical Information	The technical information, recommendations and other statements contained in this document are based upon tests or experience that 3M believes are reliable, but the accuracy or completeness of such information is not guaranteed.
Product Use	Many factors beyond 3M's control and uniquely within user's knowledge and control can affect the use and performance of a 3M product in a particular application. Given the variety of factors that can affect the use and performance of a 3M product, user is solely responsible for evaluating the 3M product and determining whether it is fit for a particular purpose and suitable for user's method of application.
Warranty, Limited Remedy, and Disclaimer	Unless an additional warranty is specifically stated on the applicable 3M product packaging or product literature, 3M warrants that each 3M product meets the applicable 3M product specification at the time 3M ships the product. 3M MAKES NO OTHER WARRANTIES OR CONDITIONS, EXPRESS OR IMPLIED, INCLUDING, BUT NOT LIMITED TO, ANY IMPLIED WARRANTY OR CONDITION OF MERCHANTABILITY OR FITNESS FOR A PARTICULAR PURPOSE OR ANY IMPLIED WARRANTY OR CONDITION ARISING OUT OF A COURSE OF DEALING, CUSTOM OR USAGE OF TRADE. If the 3M product does not conform to this warranty, then the sole and exclusive remedy is, at 3M's option, replacement of the 3M product or refund of the purchase price.
Limitation of Liability	Except where prohibited by law, 3M will not be liable for any loss or damage arising from the 3M product, whether direct, indirect, special, incidental or consequential, regardless of the legal theory asserted, including warranty, contract, negligence or strict liability.

3M

Automotive Aftermarket Division
3M Center, Building 223-6N-01
St. Paul, MN 55144-1000
1-877-666-2277 (1-877-MMM-CARS)
www.3M.com/automotive

3M is a trademark of 3M Company.
Printed in U.S.A.
©3M 2017 P.N. 05907 (7/17)

This is the last page

SAFETY DATA SHEET

Date of issue/Date of revision **29 October 2020**
Version 15.02

Section 1. Identification

Product name	: HIGH TEMP REDUCER
Product code	: ECR85
Other means of identification	: Not available.
Product type	: Liquid.

Relevant identified uses of the substance or mixture and uses advised against

Product use	: Industrial applications.
Use of the substance/ mixture	: Coating. Paints. Painting-related materials.
Uses advised against	: Not applicable.

Manufacturer	: PPG Industries, Inc. One PPG Place, Pittsburgh, PA 15272
Emergency telephone number	: (412) 434-4515 (U.S.) (514) 645-1320 (Canada) SETIQ Interior de la República: 800-00-214-00 (México) SETIQ Ciudad de México: (55) 5559-1588 (México)
Technical Phone Number	: 1-800-647-6050

Section 2. Hazards identification

OSHA/HCS status	: This material is considered hazardous by the OSHA Hazard Communication Standard (29 CFR 1910.1200).
Classification of the substance or mixture	: FLAMMABLE LIQUIDS - Category 3 ACUTE TOXICITY (inhalation) - Category 4 SKIN IRRITATION - Category 2 EYE IRRITATION - Category 2A CARCINOGENICITY - Category 2 TOXIC TO REPRODUCTION - Category 2 SPECIFIC TARGET ORGAN TOXICITY (SINGLE EXPOSURE) (Respiratory tract irritation) - Category 3 SPECIFIC TARGET ORGAN TOXICITY (REPEATED EXPOSURE) - Category 2 Percentage of the mixture consisting of ingredient(s) of unknown acute toxicity: 11.2% (dermal), 11.2% (inhalation)

GHS label elements

Section 2. Hazards identification

Hazard pictograms :

Signal word : Warning

Hazard statements : Flammable liquid and vapor.
Causes skin irritation.
Causes serious eye irritation.
Harmful if inhaled.
May cause respiratory irritation.
Suspected of causing cancer.
Suspected of damaging fertility or the unborn child.
May cause damage to organs through prolonged or repeated exposure.

Precautionary statements

Prevention : Obtain special instructions before use. Do not handle until all safety precautions have been read and understood. Wear protective gloves, protective clothing and eye or face protection. Keep away from heat, hot surfaces, sparks, open flames and other ignition sources. No smoking. Use explosion-proof electrical, ventilating or lighting equipment. Use non-sparking tools. Take action to prevent static discharges. Use only outdoors or in a well-ventilated area. Do not breathe vapor. Wash thoroughly after handling.

Response : IF exposed or concerned: Get medical advice or attention. IF INHALED: Remove person to fresh air and keep comfortable for breathing. Call a POISON CENTER or doctor if you feel unwell. IF ON SKIN (or hair): Take off immediately all contaminated clothing. Rinse skin with water. IF ON SKIN: Wash with plenty of water. If skin irritation occurs: Get medical advice or attention. IF IN EYES: Rinse cautiously with water for several minutes. Remove contact lenses, if present and easy to do. Continue rinsing. If eye irritation persists: Get medical advice or attention.

Storage : Store locked up. Store in a well-ventilated place. Keep container tightly closed. Keep cool.

Disposal : Dispose of contents and container in accordance with all local, regional, national and international regulations.

Supplemental label elements : Repeated exposure to high vapor concentrations may cause irritation of the respiratory system and permanent brain and nervous system damage. Inhalation of vapor/aerosol concentrations above the recommended exposure limits causes headaches, drowsiness and nausea and may lead to unconsciousness or death. Avoid contact with skin and clothing. Wash thoroughly after handling. Emits toxic fumes when heated.

Hazards not otherwise classified : Prolonged or repeated contact may dry skin and cause irritation.

Section 3. Composition/information on ingredients

Substance/mixture : Mixture

Product name : HIGH TEMP REDUCER

Section 3. Composition/information on ingredients

Ingredient name	%	CAS number
4-chloro-α,α,α-trifluorotoluene	≥50 - ≤75	98-56-6
5-methylhexan-2-one	≥10 - ≤20	110-12-3
2-ethylhexyl acetate	≥10 - ≤20	103-09-3
2-butoxyethyl acetate	≥5.0 - ≤10	112-07-2
4-methylpentan-2-one	≥5.0 - ≤10	108-10-1
n-butyl acetate	≥5.0 - ≤10	123-86-4

SUB codes represent substances without registered CAS Numbers.

Any concentration shown as a range is to protect confidentiality or is due to batch variation.

There are no additional ingredients present which, within the current knowledge of the supplier and in the concentrations applicable, are classified as hazardous to health or the environment and hence require reporting in this section.

Occupational exposure limits, if available, are listed in Section 8.

Section 4. First aid measures

If ingestion, irritation, any type of overexposure or symptoms of overexposure occur during or persists after use of this product, contact a POISON CONTROL CENTER, EMERGENCY ROOM OR PHYSICIAN immediately; have Safety Data Sheet information available. Never give anything by mouth to an unconscious or convulsing person.

Description of necessary first aid measures

Eye contact : Remove contact lenses, irrigate copiously with clean, fresh water, holding the eyelids apart for at least 10 minutes and seek immediate medical advice.

Inhalation : Remove to fresh air. Keep person warm and at rest. If not breathing, if breathing is irregular or if respiratory arrest occurs, provide artificial respiration or oxygen by trained personnel.

Skin contact : Remove contaminated clothing and shoes. Wash skin thoroughly with soap and water or use recognized skin cleanser. Do NOT use solvents or thinners.

Ingestion : If swallowed, seek medical advice immediately and show this container or label. Keep person warm and at rest. Do NOT induce vomiting.

Most important symptoms/effects, acute and delayed

Potential acute health effects

Eye contact : Causes serious eye irritation.

Inhalation : Harmful if inhaled. May cause respiratory irritation.

Skin contact : Causes skin irritation. Defatting to the skin.

Ingestion : No known significant effects or critical hazards.

Over-exposure signs/symptoms

Eye contact : Adverse symptoms may include the following:
pain or irritation
watering
redness

Inhalation : Adverse symptoms may include the following:
respiratory tract irritation
coughing
reduced fetal weight
increase in fetal deaths
skeletal malformations

Section 4. First aid measures

Skin contact : Adverse symptoms may include the following:
irritation
redness
dryness
cracking
reduced fetal weight
increase in fetal deaths
skeletal malformations

Ingestion : Adverse symptoms may include the following:
reduced fetal weight
increase in fetal deaths
skeletal malformations

Indication of immediate medical attention and special treatment needed, if necessary

Notes to physician : In case of inhalation of decomposition products in a fire, symptoms may be delayed. The exposed person may need to be kept under medical surveillance for 48 hours.

Specific treatments : No specific treatment.

Protection of first-aiders : No action shall be taken involving any personal risk or without suitable training. If it is suspected that fumes are still present, the rescuer should wear an appropriate mask or self-contained breathing apparatus. It may be dangerous to the person providing aid to give mouth-to-mouth resuscitation.

See toxicological information (Section 11)

Section 5. Fire-fighting measures

Extinguishing media

Suitable extinguishing media : Use dry chemical, CO_2, water spray (fog) or foam.

Unsuitable extinguishing media : Do not use water jet.

Specific hazards arising from the chemical : Flammable liquid and vapor. In a fire or if heated, a pressure increase will occur and the container may burst, with the risk of a subsequent explosion. Runoff to sewer may create fire or explosion hazard.

Hazardous thermal decomposition products : Decomposition products may include the following materials:
carbon oxides
halogenated compounds
carbonyl halides

Special protective actions for fire-fighters : Promptly isolate the scene by removing all persons from the vicinity of the incident if there is a fire. No action shall be taken involving any personal risk or without suitable training. Move containers from fire area if this can be done without risk. Use water spray to keep fire-exposed containers cool.

Special protective equipment for fire-fighters : Fire-fighters should wear appropriate protective equipment and self-contained breathing apparatus (SCBA) with a full face-piece operated in positive pressure mode.

Section 6. Accidental release measures

Personal precautions, protective equipment and emergency procedures

For non-emergency personnel : No action shall be taken involving any personal risk or without suitable training. Evacuate surrounding areas. Keep unnecessary and unprotected personnel from entering. Do not touch or walk through spilled material. Shut off all ignition sources. No flares, smoking or flames in hazard area. Avoid breathing vapor or mist. Provide adequate ventilation. Wear appropriate respirator when ventilation is inadequate. Put on appropriate personal protective equipment.

For emergency responders : If specialized clothing is required to deal with the spillage, take note of any information in Section 8 on suitable and unsuitable materials. See also the information in "For non-emergency personnel".

Environmental precautions : Avoid dispersal of spilled material and runoff and contact with soil, waterways, drains and sewers. Inform the relevant authorities if the product has caused environmental pollution (sewers, waterways, soil or air).

Methods and materials for containment and cleaning up

Small spill : Stop leak if without risk. Move containers from spill area. Use spark-proof tools and explosion-proof equipment. Dilute with water and mop up if water-soluble. Alternatively, or if water-insoluble, absorb with an inert dry material and place in an appropriate waste disposal container. Dispose of via a licensed waste disposal contractor.

Large spill : Stop leak if without risk. Move containers from spill area. Use spark-proof tools and explosion-proof equipment. Approach release from upwind. Prevent entry into sewers, water courses, basements or confined areas. Wash spillages into an effluent treatment plant or proceed as follows. Contain and collect spillage with non-combustible, absorbent material e.g. sand, earth, vermiculite or diatomaceous earth and place in container for disposal according to local regulations (see Section 13). Dispose of via a licensed waste disposal contractor. Contaminated absorbent material may pose the same hazard as the spilled product. Note: see Section 1 for emergency contact information and Section 13 for waste disposal.

Section 7. Handling and storage

Precautions for safe handling

Protective measures : Put on appropriate personal protective equipment (see Section 8). Avoid exposure - obtain special instructions before use. Avoid exposure during pregnancy. Do not handle until all safety precautions have been read and understood. Do not get in eyes or on skin or clothing. Do not breathe vapor or mist. Do not ingest. Use only with adequate ventilation. Wear appropriate respirator when ventilation is inadequate. Do not enter storage areas and confined spaces unless adequately ventilated. Keep in the original container or an approved alternative made from a compatible material, kept tightly closed when not in use. Store and use away from heat, sparks, open flame or any other ignition source. Use explosion-proof electrical (ventilating, lighting and material handling) equipment. Use only non-sparking tools. Take precautionary measures against electrostatic discharges. Empty containers retain product residue and can be hazardous. Do not reuse container.

Special precautions : If this material is part of a multiple component system, read the Safety Data Sheet(s) for the other component or components before blending as the resulting mixture may have the hazards of all of its parts.

Section 7. Handling and storage

Advice on general occupational hygiene : Eating, drinking and smoking should be prohibited in areas where this material is handled, stored and processed. Workers should wash hands and face before eating, drinking and smoking. Remove contaminated clothing and protective equipment before entering eating areas. See also Section 8 for additional information on hygiene measures.

Conditions for safe storage, including any incompatibilities : Do not store below the following temperature: 5°C (41°F). Store in accordance with local regulations. Store in a segregated and approved area. Store in original container protected from direct sunlight in a dry, cool and well-ventilated area, away from incompatible materials (see Section 10) and food and drink. Store locked up. Eliminate all ignition sources. Separate from oxidizing materials. Keep container tightly closed and sealed until ready for use. Containers that have been opened must be carefully resealed and kept upright to prevent leakage. Do not store in unlabeled containers. Use appropriate containment to avoid environmental contamination.

Section 8. Exposure controls/personal protection

Control parameters

Occupational exposure limits

Ingredient name	Exposure limits
4-chloro-α,α,α-trifluorotoluene	**IPEL (PPG).** TWA: 0.57 ppm STEL: 1.71 ppm
5-methylhexan-2-one	**ACGIH TLV (United States, 3/2019).** TWA: 93 mg/m³ 8 hours. TWA: 20 ppm 8 hours. STEL: 50 ppm 15 minutes. STEL: 234 mg/m³ 15 minutes. **OSHA PEL (United States, 5/2018).** TWA: 475 mg/m³ 8 hours. TWA: 100 ppm 8 hours.
2-ethylhexyl acetate	None.
2-butoxyethyl acetate	**ACGIH TLV (United States, 3/2019).** TWA: 20 ppm 8 hours.
4-methylpentan-2-one	**ACGIH TLV (United States, 3/2019).** STEL: 75 ppm 15 minutes. TWA: 20 ppm 8 hours. **OSHA PEL (United States, 5/2018).** TWA: 410 mg/m³ 8 hours. TWA: 100 ppm 8 hours.
n-butyl acetate	**OSHA PEL (United States, 5/2018).** TWA: 710 mg/m³ 8 hours. TWA: 150 ppm 8 hours. **ACGIH TLV (United States, 3/2019).** STEL: 150 ppm 15 minutes. TWA: 50 ppm 8 hours.

Key to abbreviations

A = Acceptable Maximum Peak
ACGIH = American Conference of Governmental Industrial Hygienists.
C = Ceiling Limit
F = Fume
S = Potential skin absorption
SR = Respiratory sensitization
SS = Skin sensitization
STEL = Short term Exposure limit values

Section 8. Exposure controls/personal protection

IPEL	= Internal Permissible Exposure Limit	TD	= Total dust
OSHA	= Occupational Safety and Health Administration.	TLV	= Threshold Limit Value
R	= Respirable	TWA	= Time Weighted Average
Z	= OSHA 29 CFR 1910.1200 Subpart Z - Toxic and Hazardous Substances		

Consult local authorities for acceptable exposure limits.

Recommended monitoring procedures : If this product contains ingredients with exposure limits, personal, workplace atmosphere or biological monitoring may be required to determine the effectiveness of the ventilation or other control measures and/or the necessity to use respiratory protective equipment. Reference should be made to appropriate monitoring standards. Reference to national guidance documents for methods for the determination of hazardous substances will also be required.

Appropriate engineering controls : Use only with adequate ventilation. Use process enclosures, local exhaust ventilation or other engineering controls to keep worker exposure to airborne contaminants below any recommended or statutory limits. The engineering controls also need to keep gas, vapor or dust concentrations below any lower explosive limits. Use explosion-proof ventilation equipment.

Environmental exposure controls : Emissions from ventilation or work process equipment should be checked to ensure they comply with the requirements of environmental protection legislation. In some cases, fume scrubbers, filters or engineering modifications to the process equipment will be necessary to reduce emissions to acceptable levels.

Individual protection measures

Hygiene measures : Wash hands, forearms and face thoroughly after handling chemical products, before eating, smoking and using the lavatory and at the end of the working period. Appropriate techniques should be used to remove potentially contaminated clothing. Wash contaminated clothing before reusing. Ensure that eyewash stations and safety showers are close to the workstation location.

Eye/face protection : Chemical splash goggles.

Skin protection

Hand protection : Chemical-resistant, impervious gloves complying with an approved standard should be worn at all times when handling chemical products if a risk assessment indicates this is necessary. Considering the parameters specified by the glove manufacturer, check during use that the gloves are still retaining their protective properties. It should be noted that the time to breakthrough for any glove material may be different for different glove manufacturers. In the case of mixtures, consisting of several substances, the protection time of the gloves cannot be accurately estimated.

Gloves : For prolonged or repeated handling, use the following type of gloves:

May be used: Viton®
Recommended: butyl rubber
Not recommended: natural rubber (latex), nitrile rubber

Body protection : Personal protective equipment for the body should be selected based on the task being performed and the risks involved and should be approved by a specialist before handling this product. When there is a risk of ignition from static electricity, wear anti-static protective clothing. For the greatest protection from static discharges, clothing should include anti-static overalls, boots and gloves.

Section 8. Exposure controls/personal protection

Other skin protection : Appropriate footwear and any additional skin protection measures should be selected based on the task being performed and the risks involved and should be approved by a specialist before handling this product.

Respiratory protection : Respirator selection must be based on known or anticipated exposure levels, the hazards of the product and the safe working limits of the selected respirator. If workers are exposed to concentrations above the exposure limit, they must use appropriate, certified respirators. Use a properly fitted, air-purifying or air-fed respirator complying with an approved standard if a risk assessment indicates this is necessary.

Section 9. Physical and chemical properties

Appearance

Physical state : Liquid.

Color : Clear.

Odor : Not available.

Odor threshold : Not available.

pH : Not available.

Melting point : Not available.

Boiling point : >37.78°C (>100°F)

Flash point : Closed cup: 38°C (100.4°F)

Auto-ignition temperature : Not available.

Decomposition temperature : Not available.

Flammability (solid, gas) : Not available.

Lower and upper explosive (flammable) limits : Not available.

Evaporation rate : Not available.

Vapor pressure : Not available.

Vapor density : Not available.

Relative density : 1.07

Density (lbs / gal) : 8.93

Solubility : Insoluble in the following materials: cold water.

Partition coefficient: n-octanol/water : Not available.

Viscosity : Kinematic (40°C (104°F)): <0.14 cm^2/s (<14 cSt)

Volatility : 100% (v/v), 100% (w/w)

% Solid. (w/w) : 0

Section 10. Stability and reactivity

Reactivity : No specific test data related to reactivity available for this product or its ingredients.

Chemical stability : The product is stable.

Possibility of hazardous reactions : Under normal conditions of storage and use, hazardous reactions will not occur.

Section 10. Stability and reactivity

Conditions to avoid : When exposed to high temperatures may produce hazardous decomposition products. Refer to protective measures listed in sections 7 and 8.

Incompatible materials : Keep away from the following materials to prevent strong exothermic reactions: oxidizing agents, strong alkalis, strong acids.

Hazardous decomposition products : Decomposition products may include the following materials: carbon monoxide, carbon dioxide, smoke, oxides of nitrogen.

Section 11. Toxicological information

Information on toxicological effects

Acute toxicity

Product/ingredient name	Result	Species	Dose	Exposure
4-chloro-α,α,α-trifluorotoluene	LC50 Inhalation Vapor	Rat	33080 mg/m³	4 hours
	LD50 Dermal	Rabbit	>2.7 g/kg	-
	LD50 Oral	Rat	13 g/kg	-
5-methylhexan-2-one	LC50 Inhalation Gas.	Rat	5000 ppm	4 hours
	LD50 Dermal	Rabbit	8.14 g/kg	-
	LD50 Oral	Rat	5657 mg/kg	-
2-ethylhexyl acetate	LD50 Oral	Rat	3 g/kg	-
2-butoxyethyl acetate	LD50 Dermal	Rabbit	1500 mg/kg	-
	LD50 Oral	Rat	1880 mg/kg	-
4-methylpentan-2-one	LC50 Inhalation Vapor	Rat	12.3 mg/l	4 hours
	LD50 Dermal	Rabbit	>5000 mg/kg	-
	LD50 Oral	Rat	2.08 g/kg	-
n-butyl acetate	LC50 Inhalation Vapor	Rat	>21.1 mg/l	4 hours
	LC50 Inhalation Vapor	Rat	2000 ppm	4 hours
	LD50 Dermal	Rabbit	>17600 mg/kg	-
	LD50 Oral	Rat	10.768 g/kg	-

Conclusion/Summary : There are no data available on the mixture itself.

Irritation/Corrosion

Conclusion/Summary

Skin : There are no data available on the mixture itself.

Eyes : There are no data available on the mixture itself.

Respiratory : There are no data available on the mixture itself.

Sensitization

Conclusion/Summary

Skin : There are no data available on the mixture itself.

Respiratory : There are no data available on the mixture itself.

Mutagenicity

Conclusion/Summary : There are no data available on the mixture itself.

Carcinogenicity

Conclusion/Summary : There are no data available on the mixture itself.

Classification

Section 11. Toxicological information

Product/ingredient name	OSHA	IARC	NTP
4-chloro-α,α,α-trifluorotoluene	-	2B	-
4-methylpentan-2-one	-	2B	-

Carcinogen Classification code:

IARC: 1, 2A, 2B, 3, 4
NTP: Known to be a human carcinogen; Reasonably anticipated to be a human carcinogen
OSHA: +
Not listed/not regulated: -

Reproductive toxicity

Product/ingredient name	Maternal toxicity	Fertility	Development toxin	Species	Dose	Exposure
5-methylhexan-2-one	-	-	Equivocal	Rabbit	Inhalation: 1250 ppm	-

Conclusion/Summary : There are no data available on the mixture itself.

Teratogenicity

Conclusion/Summary : There are no data available on the mixture itself.

Specific target organ toxicity (single exposure)

Name	Category	Route of exposure	Target organs
4-chloro-α,α,α-trifluorotoluene	Category 3	-	Respiratory tract irritation
4-methylpentan-2-one	Category 3	-	Respiratory tract irritation
n-butyl acetate	Category 3	-	Narcotic effects

Specific target organ toxicity (repeated exposure)

Name	Category	Route of exposure	Target organs
2-butoxyethyl acetate	Category 2	-	-

Target organs : Contains material which causes damage to the following organs: brain, central nervous system (CNS).
Contains material which may cause damage to the following organs: blood, kidneys, liver, spleen, lymphatic system, upper respiratory tract, skin, adrenal, bone marrow, eye, lens or cornea.

Aspiration hazard

Not available.

Information on the likely routes of exposure

Potential acute health effects

Eye contact : Causes serious eye irritation.
Inhalation : Harmful if inhaled. May cause respiratory irritation.
Skin contact : Causes skin irritation. Defatting to the skin.
Ingestion : No known significant effects or critical hazards.

Over-exposure signs/symptoms

Section 11. Toxicological information

Eye contact : Adverse symptoms may include the following:
pain or irritation
watering
redness

Inhalation : Adverse symptoms may include the following:
respiratory tract irritation
coughing
reduced fetal weight
increase in fetal deaths
skeletal malformations

Skin contact : Adverse symptoms may include the following:
irritation
redness
dryness
cracking
reduced fetal weight
increase in fetal deaths
skeletal malformations

Ingestion : Adverse symptoms may include the following:
reduced fetal weight
increase in fetal deaths
skeletal malformations

Delayed and immediate effects and also chronic effects from short and long term exposure

Conclusion/Summary : There are no data available on the mixture itself. Exposure to component solvent vapor concentrations in excess of the stated occupational exposure limit may result in adverse health effects such as mucous membrane and respiratory system irritation and adverse effects on the kidneys, liver and central nervous system. Symptoms and signs include headache, dizziness, fatigue, muscular weakness, drowsiness and, in extreme cases, loss of consciousness. Solvents may cause some of the above effects by absorption through the skin. There is some evidence that repeated exposure to organic solvent vapors in combination with constant loud noise can cause greater hearing loss than expected from exposure to noise alone. If splashed in the eyes, the liquid may cause irritation and reversible damage. Ingestion may cause nausea, diarrhea and vomiting. This takes into account, where known, delayed and immediate effects and also chronic effects of components from short-term and long-term exposure by oral, inhalation and dermal routes of exposure and eye contact.

Short term exposure

Potential immediate effects : There are no data available on the mixture itself.

Potential delayed effects : There are no data available on the mixture itself.

Long term exposure

Potential immediate effects : There are no data available on the mixture itself.

Potential delayed effects : There are no data available on the mixture itself.

Potential chronic health effects

General : May cause damage to organs through prolonged or repeated exposure. Prolonged or repeated contact can defat the skin and lead to irritation, cracking and/or dermatitis.

Carcinogenicity : Suspected of causing cancer. Risk of cancer depends on duration and level of exposure.

Mutagenicity : No known significant effects or critical hazards.

Section 11. Toxicological information

Reproductive toxicity : Suspected of damaging fertility or the unborn child.

Numerical measures of toxicity

Acute toxicity estimates

Product/ingredient name	Oral (mg/kg)	Dermal (mg/kg)	Inhalation (gases) (ppm)	Inhalation (vapors) (mg/l)	Inhalation (dusts and mists) (mg/l)
HIGH TEMP REDUCER	9480.6	3319.9	29608.9	35.2	4.7
4-chloro-α,α,α-trifluorotoluene	13000	2500	N/A	33.08	N/A
5-methylhexan-2-one	5657	8140	5000	11	1.5
2-ethylhexyl acetate	3000	N/A	N/A	N/A	N/A
2-butoxyethyl acetate	1880	1500	N/A	11	1.5
4-methylpentan-2-one	2080	N/A	N/A	12.3	1.5
n-butyl acetate	10768	N/A	N/A	N/A	N/A

Section 12. Ecological information

Toxicity

Product/ingredient name	Result	Species	Exposure
5-methylhexan-2-one	Acute LC50 159 mg/l	Fish	96 hours
2-butoxyethyl acetate	Acute LC50 28 mg/l	Fish	96 hours
4-methylpentan-2-one	Acute LC50 >179 mg/l	Fish	96 hours
n-butyl acetate	Acute LC50 18 mg/l	Fish	96 hours

Persistence and degradability

Product/ingredient name	Test	Result	Dose	Inoculum
5-methylhexan-2-one	OECD 301D	67 % - Readily - 28 days	-	-
2-butoxyethyl acetate	OECD 301A	97 % - Readily - 7 days	-	-
4-methylpentan-2-one	OECD 301F	83 % - Readily - 28 days	-	-
n-butyl acetate	TEPA and OECD 301D	83 % - Readily - 28 days	-	-

Product/ingredient name	Aquatic half-life	Photolysis	Biodegradability
5-methylhexan-2-one	-	-	Readily
2-butoxyethyl acetate	-	-	Readily
4-methylpentan-2-one	-	-	Readily
n-butyl acetate	-	-	Readily

Bioaccumulative potential

Product/ingredient name	$LogP_{ow}$	BCF	Potential
5-methylhexan-2-one	1.88	-	low
2-butoxyethyl acetate	1.51	-	low
4-methylpentan-2-one	1.31	-	low
n-butyl acetate	1.78	-	low

Section 12. Ecological information

Mobility in soil

Soil/water partition coefficient (K_{oc}) : Not available.

Section 13. Disposal considerations

Disposal methods : The generation of waste should be avoided or minimized wherever possible. Disposal of this product, solutions and any by-products should at all times comply with the requirements of environmental protection and waste disposal legislation and any regional local authority requirements. Dispose of surplus and non-recyclable products via a licensed waste disposal contractor. Waste should not be disposed of untreated to the sewer unless fully compliant with the requirements of all authorities with jurisdiction. Waste packaging should be recycled. Incineration or landfill should only be considered when recycling is not feasible. This material and its container must be disposed of in a safe way. Care should be taken when handling emptied containers that have not been cleaned or rinsed out. Empty containers or liners may retain some product residues. Vapor from product residues may create a highly flammable or explosive atmosphere inside the container. Do not cut, weld or grind used containers unless they have been cleaned thoroughly internally. Avoid dispersal of spilled material and runoff and contact with soil, waterways, drains and sewers.

Disposal should be in accordance with applicable regional, national and local laws and regulations.

Refer to Section 7: HANDLING AND STORAGE and Section 8: EXPOSURE CONTROLS/PERSONAL PROTECTION for additional handling information and protection of employees. Section 6. Accidental release measures

14. Transport information

	DOT	IMDG	IATA
UN number	UN1263	UN1263	UN1263
UN proper shipping name	PAINT RELATED MATERIAL	PAINT RELATED MATERIAL	PAINT RELATED MATERIAL
Transport hazard class (es)	3	3	3
Packing group	III	III	III
Environmental hazards	No.	No.	No.
Marine pollutant substances	Not applicable.	Not applicable.	Not applicable.

Additional information

DOT : This product may be re-classified as "Combustible Liquid," unless transported by vessel or aircraft. Non-bulk packages (less than or equal to 119 gal) of combustible liquids are not regulated as hazardous materials.

IMDG : None identified.

IATA : None identified.

14. Transport information

Special precautions for user : **Transport within user's premises:** always transport in closed containers that are upright and secure. Ensure that persons transporting the product know what to do in the event of an accident or spillage.

Transport in bulk according to IMO instruments : Not applicable.

Section 15. Regulatory information

United States

United States inventory (TSCA 8b) : All components are active or exempted.

United States - TSCA 12(b) - Chemical export notification:

4-chloro-α,α,α-trifluorotoluene	One time notification

United States - TSCA 5(a)2 - Final significant new use rules:

4-chloro-α,α,α-trifluorotoluene	Listed	40 CFR 799.5089
2-ethoxyethanol	Listed	40 CFR 721.10001
2-ethoxyethyl acetate	Listed	

SARA 302/304

SARA 304 RQ : Not applicable.

Composition/information on ingredients

No products were found.

SARA 311/312

Classification : FLAMMABLE LIQUIDS - Category 3
ACUTE TOXICITY (inhalation) - Category 4
SKIN IRRITATION - Category 2
EYE IRRITATION - Category 2A
CARCINOGENICITY - Category 2
TOXIC TO REPRODUCTION - Category 2
SPECIFIC TARGET ORGAN TOXICITY (SINGLE EXPOSURE) (Respiratory tract irritation) - Category 3
SPECIFIC TARGET ORGAN TOXICITY (REPEATED EXPOSURE) - Category 2
HNOC - Defatting irritant

Composition/information on ingredients

Name	%	Classification
4-chloro-α,α,α-trifluorotoluene	≥50 - ≤75	FLAMMABLE LIQUIDS - Category 3 SKIN IRRITATION - Category 2 EYE IRRITATION - Category 2A CARCINOGENICITY - Category 2 SPECIFIC TARGET ORGAN TOXICITY (SINGLE EXPOSURE) (Respiratory tract irritation) - Category 3 HNOC - Defatting irritant
5-methylhexan-2-one	≥10 - ≤20	FLAMMABLE LIQUIDS - Category 3 ACUTE TOXICITY (inhalation) - Category 4 TOXIC TO REPRODUCTION - Category 2 HNOC - Defatting irritant
2-ethylhexyl acetate	≥10 - ≤20	SKIN IRRITATION - Category 2
2-butoxyethyl acetate	≥5.0 - ≤10	FLAMMABLE LIQUIDS - Category 4 ACUTE TOXICITY (oral) - Category 4

Section 15. Regulatory information

4-methylpentan-2-one	≥5.0 - ≤10	ACUTE TOXICITY (dermal) - Category 4 ACUTE TOXICITY (inhalation) - Category 4 SPECIFIC TARGET ORGAN TOXICITY (REPEATED EXPOSURE) - Category 2 FLAMMABLE LIQUIDS - Category 2 ACUTE TOXICITY (inhalation) - Category 4 EYE IRRITATION - Category 2A CARCINOGENICITY - Category 2 SPECIFIC TARGET ORGAN TOXICITY (SINGLE EXPOSURE) (Respiratory tract irritation) - Category 3 HNOC - Defatting irritant
n-butyl acetate	≥5.0 - ≤10	FLAMMABLE LIQUIDS - Category 2 SPECIFIC TARGET ORGAN TOXICITY (SINGLE EXPOSURE) (Narcotic effects) - Category 3 HNOC - Defatting irritant

SARA 313

		Chemical name	CAS number	Concentration
Supplier notification	:	2-butoxyethyl acetate	112-07-2	5 - 10
		4-methylpentan-2-one	108-10-1	3 - 7

SARA 313 notifications must not be detached from the SDS and any copying and redistribution of the SDS shall include copying and redistribution of the notice attached to copies of the SDS subsequently redistributed.

Additional environmental information is contained on the Environmental Data Sheet for this product, which can be obtained from your PPG representative.

California Prop. 65

⚠ **WARNING**: Cancer and Reproductive Harm - www.P65Warnings.ca.gov.

Section 16. Other information

Hazardous Material Information System (U.S.A.)

Health : 2 * **Flammability** : 2 **Physical hazards** : 0

(*) - Chronic effects

Caution: HMIS® ratings are based on a 0-4 rating scale, with 0 representing minimal hazards or risks, and 4 representing significant hazards or risks. Although HMIS® ratings and the associated label are not required on MSDSs or products leaving a facility under 29 CFR 1910.1200, the preparer may choose to provide them. HMIS® ratings are to be used with a fully implemented HMIS® program. HMIS® is a registered trademark and service mark of the American Coatings Association, Inc.

The customer is responsible for determining the PPE code for this material. For more information on HMIS® Personal Protective Equipment (PPE) codes, consult the HMIS® Implementation Manual.

National Fire Protection Association (U.S.A.)

Health : 2 **Flammability** : 2 **Instability** : 0

Date of previous issue : **9/24/2020**

Organization that prepared the MSDS : EHS

Section 16. Other information

Key to abbreviations : ATE = Acute Toxicity Estimate
BCF = Bioconcentration Factor
GHS = Globally Harmonized System of Classification and Labelling of Chemicals
IATA = International Air Transport Association
IBC = Intermediate Bulk Container
IMDG = International Maritime Dangerous Goods
LogPow = logarithm of the octanol/water partition coefficient
MARPOL = International Convention for the Prevention of Pollution From Ships, 1973 as modified by the Protocol of 1978. ("Marpol" = marine pollution)
N/A = Not available
SGG = Segregation Group
UN = United Nations

◤ **Indicates information that has changed from previously issued version.**

Disclaimer

The information contained in this data sheet is based on present scientific and technical knowledge. The purpose of this information is to draw attention to the health and safety aspects concerning the products supplied by PPG, and to recommend precautionary measures for the storage and handling of the products. No warranty or guarantee is given in respect of the properties of the products. No liability can be accepted for any failure to observe the precautionary measures described in this data sheet or for any misuse of the products.

SAFETY DATA SHEET

Date of issue/Date of revision **30 July 2020**
Version 10.03

Section 1. Identification

Product name	: MID TEMP REDUCER
Product code	: ECR75
Other means of identification	: Not available.
Product type	: Liquid.

Relevant identified uses of the substance or mixture and uses advised against

Product use	: Industrial applications.
Use of the substance/ mixture	: Coating. Paints. Painting-related materials.
Uses advised against	: Not applicable.

Manufacturer	: PPG Industries, Inc. One PPG Place, Pittsburgh, PA 15272
Emergency telephone number	: (412) 434-4515 (U.S.) (514) 645-1320 (Canada) SETIQ Interior de la República: 800-00-214-00 (México) SETIQ Ciudad de México: (55) 5559-1588 (México)
Technical Phone Number	: 1-800-647-6050

Section 2. Hazards identification

OSHA/HCS status	: This material is considered hazardous by the OSHA Hazard Communication Standard (29 CFR 1910.1200).
Classification of the substance or mixture	: FLAMMABLE LIQUIDS - Category 3 ACUTE TOXICITY (inhalation) - Category 4 SKIN IRRITATION - Category 2 EYE IRRITATION - Category 2A CARCINOGENICITY - Category 2 TOXIC TO REPRODUCTION - Category 2 SPECIFIC TARGET ORGAN TOXICITY (SINGLE EXPOSURE) (Respiratory tract irritation) - Category 3 Percentage of the mixture consisting of ingredient(s) of unknown acute toxicity: 8.8% (Dermal), 8.8% (Inhalation)

GHS label elements

Section 2. Hazards identification

Hazard pictograms :

Signal word : Warning

Hazard statements : Flammable liquid and vapor.
Causes skin irritation.
Causes serious eye irritation.
Harmful if inhaled.
May cause respiratory irritation.
Suspected of causing cancer.
Suspected of damaging fertility or the unborn child.

Precautionary statements

Prevention : Obtain special instructions before use. Do not handle until all safety precautions have been read and understood. Wear protective gloves, protective clothing and eye or face protection. Keep away from heat, hot surfaces, sparks, open flames and other ignition sources. No smoking. Use explosion-proof electrical, ventilating or lighting equipment. Use non-sparking tools. Take action to prevent static discharges. Use only outdoors or in a well-ventilated area. Avoid breathing vapor. Wash thoroughly after handling.

Response : IF exposed or concerned: Get medical advice or attention. IF INHALED: Remove person to fresh air and keep comfortable for breathing. Call a POISON CENTER or doctor if you feel unwell. IF ON SKIN (or hair): Take off immediately all contaminated clothing. Rinse skin with water. IF ON SKIN: Wash with plenty of water. If skin irritation occurs: Get medical advice or attention. IF IN EYES: Rinse cautiously with water for several minutes. Remove contact lenses, if present and easy to do. Continue rinsing. If eye irritation persists: Get medical advice or attention.

Storage : Store locked up. Store in a well-ventilated place. Keep container tightly closed. Keep cool.

Disposal : Dispose of contents and container in accordance with all local, regional, national and international regulations.

Supplemental label elements : Repeated exposure to high vapor concentrations may cause irritation of the respiratory system and permanent brain and nervous system damage. Inhalation of vapor/aerosol concentrations above the recommended exposure limits causes headaches, drowsiness and nausea and may lead to unconsciousness or death. Avoid contact with skin and clothing. Wash thoroughly after handling. Emits toxic fumes when heated.

Hazards not otherwise classified : Prolonged or repeated contact may dry skin and cause irritation.

Section 3. Composition/information on ingredients

Substance/mixture : Mixture

Product name : MID TEMP REDUCER

Ingredient name	%	CAS number
4-chloro-α,α,α-trifluorotoluene	≥50 - ≤75	98-56-6
5-methylhexan-2-one	≥10 - ≤20	110-12-3
4-methylpentan-2-one	≥10 - ≤20	108-10-1
2-ethylhexyl acetate	≥5.0 - ≤10	103-09-3

Section 3. Composition/information on ingredients

SUB codes represent substances without registered CAS Numbers.

Any concentration shown as a range is to protect confidentiality or is due to batch variation.

There are no additional ingredients present which, within the current knowledge of the supplier and in the concentrations applicable, are classified as hazardous to health or the environment and hence require reporting in this section.

Occupational exposure limits, if available, are listed in Section 8.

Section 4. First aid measures

If ingestion, irritation, any type of overexposure or symptoms of overexposure occur during or persists after use of this product, contact a POISON CONTROL CENTER, EMERGENCY ROOM OR PHYSICIAN immediately; have Safety Data Sheet information available. Never give anything by mouth to an unconscious or convulsing person.

Description of necessary first aid measures

Eye contact : Remove contact lenses, irrigate copiously with clean, fresh water, holding the eyelids apart for at least 10 minutes and seek immediate medical advice.

Inhalation : Remove to fresh air. Keep person warm and at rest. If not breathing, if breathing is irregular or if respiratory arrest occurs, provide artificial respiration or oxygen by trained personnel.

Skin contact : Remove contaminated clothing and shoes. Wash skin thoroughly with soap and water or use recognized skin cleanser. Do NOT use solvents or thinners.

Ingestion : If swallowed, seek medical advice immediately and show this container or label. Keep person warm and at rest. Do NOT induce vomiting.

Most important symptoms/effects, acute and delayed

Potential acute health effects

Eye contact : Causes serious eye irritation.

Inhalation : Harmful if inhaled. May cause respiratory irritation.

Skin contact : Causes skin irritation. Defatting to the skin.

Ingestion : No known significant effects or critical hazards.

Over-exposure signs/symptoms

Eye contact : Adverse symptoms may include the following:
pain or irritation
watering
redness

Inhalation : Adverse symptoms may include the following:
respiratory tract irritation
coughing
reduced fetal weight
increase in fetal deaths
skeletal malformations

Skin contact : Adverse symptoms may include the following:
irritation
redness
dryness
cracking
reduced fetal weight
increase in fetal deaths
skeletal malformations

Section 4. First aid measures

Ingestion : Adverse symptoms may include the following:
reduced fetal weight
increase in fetal deaths
skeletal malformations

Indication of immediate medical attention and special treatment needed, if necessary

Notes to physician : In case of inhalation of decomposition products in a fire, symptoms may be delayed. The exposed person may need to be kept under medical surveillance for 48 hours.

Specific treatments : No specific treatment.

Protection of first-aiders : No action shall be taken involving any personal risk or without suitable training. If it is suspected that fumes are still present, the rescuer should wear an appropriate mask or self-contained breathing apparatus. It may be dangerous to the person providing aid to give mouth-to-mouth resuscitation.

See toxicological information (Section 11)

Section 5. Fire-fighting measures

Extinguishing media

Suitable extinguishing media : Use dry chemical, CO_2, water spray (fog) or foam.

Unsuitable extinguishing media : Do not use water jet.

Specific hazards arising from the chemical : Flammable liquid and vapor. In a fire or if heated, a pressure increase will occur and the container may burst, with the risk of a subsequent explosion. Runoff to sewer may create fire or explosion hazard.

Hazardous thermal decomposition products : Decomposition products may include the following materials:
carbon oxides
halogenated compounds
carbonyl halides

Special protective actions for fire-fighters : Promptly isolate the scene by removing all persons from the vicinity of the incident if there is a fire. No action shall be taken involving any personal risk or without suitable training. Move containers from fire area if this can be done without risk. Use water spray to keep fire-exposed containers cool.

Special protective equipment for fire-fighters : Fire-fighters should wear appropriate protective equipment and self-contained breathing apparatus (SCBA) with a full face-piece operated in positive pressure mode.

Section 6. Accidental release measures

Personal precautions, protective equipment and emergency procedures

For non-emergency personnel : No action shall be taken involving any personal risk or without suitable training. Evacuate surrounding areas. Keep unnecessary and unprotected personnel from entering. Do not touch or walk through spilled material. Shut off all ignition sources. No flares, smoking or flames in hazard area. Avoid breathing vapor or mist. Provide adequate ventilation. Wear appropriate respirator when ventilation is inadequate. Put on appropriate personal protective equipment.

Section 6. Accidental release measures

For emergency responders : If specialized clothing is required to deal with the spillage, take note of any information in Section 8 on suitable and unsuitable materials. See also the information in "For non-emergency personnel".

Environmental precautions : Avoid dispersal of spilled material and runoff and contact with soil, waterways, drains and sewers. Inform the relevant authorities if the product has caused environmental pollution (sewers, waterways, soil or air).

Methods and materials for containment and cleaning up

Small spill : Stop leak if without risk. Move containers from spill area. Use spark-proof tools and explosion-proof equipment. Dilute with water and mop up if water-soluble. Alternatively, or if water-insoluble, absorb with an inert dry material and place in an appropriate waste disposal container. Dispose of via a licensed waste disposal contractor.

Large spill : Stop leak if without risk. Move containers from spill area. Use spark-proof tools and explosion-proof equipment. Approach release from upwind. Prevent entry into sewers, water courses, basements or confined areas. Wash spillages into an effluent treatment plant or proceed as follows. Contain and collect spillage with non-combustible, absorbent material e.g. sand, earth, vermiculite or diatomaceous earth and place in container for disposal according to local regulations (see Section 13). Dispose of via a licensed waste disposal contractor. Contaminated absorbent material may pose the same hazard as the spilled product. Note: see Section 1 for emergency contact information and Section 13 for waste disposal.

Section 7. Handling and storage

Precautions for safe handling

Protective measures : Put on appropriate personal protective equipment (see Section 8). Avoid exposure - obtain special instructions before use. Avoid exposure during pregnancy. Do not handle until all safety precautions have been read and understood. Do not get in eyes or on skin or clothing. Do not ingest. Avoid breathing vapor or mist. Use only with adequate ventilation. Wear appropriate respirator when ventilation is inadequate. Do not enter storage areas and confined spaces unless adequately ventilated. Keep in the original container or an approved alternative made from a compatible material, kept tightly closed when not in use. Store and use away from heat, sparks, open flame or any other ignition source. Use explosion-proof electrical (ventilating, lighting and material handling) equipment. Use only non-sparking tools. Take precautionary measures against electrostatic discharges. Empty containers retain product residue and can be hazardous. Do not reuse container.

Special precautions : If this material is part of a multiple component system, read the Safety Data Sheet(s) for the other component or components before blending as the resulting mixture may have the hazards of all of its parts.

Advice on general occupational hygiene : Eating, drinking and smoking should be prohibited in areas where this material is handled, stored and processed. Workers should wash hands and face before eating, drinking and smoking. Remove contaminated clothing and protective equipment before entering eating areas. See also Section 8 for additional information on hygiene measures.

Section 7. Handling and storage

Conditions for safe storage, including any incompatibilities : Do not store below the following temperature: 5°C (41°F). Store in accordance with local regulations. Store in a segregated and approved area. Store in original container protected from direct sunlight in a dry, cool and well-ventilated area, away from incompatible materials (see Section 10) and food and drink. Store locked up. Eliminate all ignition sources. Separate from oxidizing materials. Keep container tightly closed and sealed until ready for use. Containers that have been opened must be carefully resealed and kept upright to prevent leakage. Do not store in unlabeled containers. Use appropriate containment to avoid environmental contamination.

Section 8. Exposure controls/personal protection

Control parameters

Occupational exposure limits

Ingredient name	Exposure limits
4-chloro-α,α,α-trifluorotoluene	**IPEL (PPG).** TWA: 0.57 ppm STEL: 1.71 ppm
5-methylhexan-2-one	**ACGIH TLV (United States, 3/2019).** TWA: 93 mg/m³ 8 hours. TWA: 20 ppm 8 hours. STEL: 50 ppm 15 minutes. STEL: 234 mg/m³ 15 minutes. **OSHA PEL (United States, 5/2018).** TWA: 475 mg/m³ 8 hours. TWA: 100 ppm 8 hours.
4-methylpentan-2-one	**ACGIH TLV (United States, 3/2019).** STEL: 75 ppm 15 minutes. TWA: 20 ppm 8 hours. **OSHA PEL (United States, 5/2018).** TWA: 410 mg/m³ 8 hours. TWA: 100 ppm 8 hours.
2-ethylhexyl acetate	None.

Key to abbreviations

A = Acceptable Maximum Peak
ACGIH = American Conference of Governmental Industrial Hygienists.
C = Ceiling Limit
F = Fume
IPEL = Internal Permissible Exposure Limit
OSHA = Occupational Safety and Health Administration.
R = Respirable
Z = OSHA 29 CFR 1910.1200 Subpart Z - Toxic and Hazardous Substances
S = Potential skin absorption
SR = Respiratory sensitization
SS = Skin sensitization
STEL = Short term Exposure limit values
TD = Total dust
TLV = Threshold Limit Value
TWA = Time Weighted Average

Consult local authorities for acceptable exposure limits.

Recommended monitoring procedures : If this product contains ingredients with exposure limits, personal, workplace atmosphere or biological monitoring may be required to determine the effectiveness of the ventilation or other control measures and/or the necessity to use respiratory protective equipment. Reference should be made to appropriate monitoring standards. Reference to national guidance documents for methods for the determination of hazardous substances will also be required.

Section 8. Exposure controls/personal protection

Appropriate engineering controls : Use only with adequate ventilation. Use process enclosures, local exhaust ventilation or other engineering controls to keep worker exposure to airborne contaminants below any recommended or statutory limits. The engineering controls also need to keep gas, vapor or dust concentrations below any lower explosive limits. Use explosion-proof ventilation equipment.

Environmental exposure controls : Emissions from ventilation or work process equipment should be checked to ensure they comply with the requirements of environmental protection legislation. In some cases, fume scrubbers, filters or engineering modifications to the process equipment will be necessary to reduce emissions to acceptable levels.

Individual protection measures

Hygiene measures : Wash hands, forearms and face thoroughly after handling chemical products, before eating, smoking and using the lavatory and at the end of the working period. Appropriate techniques should be used to remove potentially contaminated clothing. Wash contaminated clothing before reusing. Ensure that eyewash stations and safety showers are close to the workstation location.

Eye/face protection : Chemical splash goggles.

Skin protection

Hand protection : Chemical-resistant, impervious gloves complying with an approved standard should be worn at all times when handling chemical products if a risk assessment indicates this is necessary. Considering the parameters specified by the glove manufacturer, check during use that the gloves are still retaining their protective properties. It should be noted that the time to breakthrough for any glove material may be different for different glove manufacturers. In the case of mixtures, consisting of several substances, the protection time of the gloves cannot be accurately estimated.

Body protection : Personal protective equipment for the body should be selected based on the task being performed and the risks involved and should be approved by a specialist before handling this product. When there is a risk of ignition from static electricity, wear anti-static protective clothing. For the greatest protection from static discharges, clothing should include anti-static overalls, boots and gloves.

Other skin protection : Appropriate footwear and any additional skin protection measures should be selected based on the task being performed and the risks involved and should be approved by a specialist before handling this product.

Respiratory protection : Respirator selection must be based on known or anticipated exposure levels, the hazards of the product and the safe working limits of the selected respirator. If workers are exposed to concentrations above the exposure limit, they must use appropriate, certified respirators. Use a properly fitted, air-purifying or air-fed respirator complying with an approved standard if a risk assessment indicates this is necessary.

Section 9. Physical and chemical properties

Appearance

Physical state : Liquid.

Color : Clear.

Odor : Not available.

Odor threshold : Not available.

pH : Not available.

Melting point : Not available.

Boiling point : >37.78°C (>100°F)

Section 9. Physical and chemical properties

Flash point	:	Closed cup: 32.22°C (90°F)
Auto-ignition temperature	:	Not available.
Decomposition temperature	:	Not available.
Flammability (solid, gas)	:	Not available.
Lower and upper explosive (flammable) limits	:	Not available.
Evaporation rate	:	Not available.
Vapor pressure	:	Not available.
Vapor density	:	Not available.
Relative density	:	1.04
Density (lbs / gal)	:	8.68
Solubility	:	Insoluble in the following materials: cold water.
Partition coefficient: n-octanol/water	:	Not available.
Viscosity	:	Kinematic (40°C (104°F)): <0.14 cm^2/s (<14 cSt)
Volatility	:	100% (v/v), 100% (w/w)
% Solid. (w/w)	:	0

Section 10. Stability and reactivity

Reactivity	:	No specific test data related to reactivity available for this product or its ingredients.
Chemical stability	:	The product is stable.
Possibility of hazardous reactions	:	Under normal conditions of storage and use, hazardous reactions will not occur.
Conditions to avoid	:	When exposed to high temperatures may produce hazardous decomposition products. Refer to protective measures listed in sections 7 and 8.
Incompatible materials	:	Keep away from the following materials to prevent strong exothermic reactions: oxidizing agents, strong alkalis, strong acids.
Hazardous decomposition products	:	Decomposition products may include the following materials: carbon monoxide, carbon dioxide, smoke, oxides of nitrogen.

Section 11. Toxicological information

Information on toxicological effects

Acute toxicity

Section 11. Toxicological information

Product/ingredient name	Result	Species	Dose	Exposure
4-chloro-α,α,α-trifluorotoluene	LC50 Inhalation Vapor	Rat	33080 mg/m³	4 hours
	LD50 Dermal	Rabbit	>2.7 g/kg	-
	LD50 Oral	Rat	13 g/kg	-
5-methylhexan-2-one	LC50 Inhalation Gas.	Rat	5000 ppm	4 hours
	LD50 Dermal	Rabbit	8.14 g/kg	-
	LD50 Oral	Rat	5657 mg/kg	-
4-methylpentan-2-one	LC50 Inhalation Vapor	Rat	12.3 mg/l	4 hours
	LD50 Dermal	Rabbit	>5000 mg/kg	-
	LD50 Oral	Rat	2.08 g/kg	-
2-ethylhexyl acetate	LD50 Oral	Rat	3 g/kg	-

Conclusion/Summary : There are no data available on the mixture itself.

Irritation/Corrosion

Conclusion/Summary

Skin : There are no data available on the mixture itself.

Eyes : There are no data available on the mixture itself.

Respiratory : There are no data available on the mixture itself.

Sensitization

Conclusion/Summary

Skin : There are no data available on the mixture itself.

Respiratory : There are no data available on the mixture itself.

Mutagenicity

Conclusion/Summary : There are no data available on the mixture itself.

Carcinogenicity

Conclusion/Summary : There are no data available on the mixture itself.

Classification

Product/ingredient name	OSHA	IARC	NTP
4-chloro-α,α,α-trifluorotoluene	-	2B	-
4-methylpentan-2-one	-	2B	-

Carcinogen Classification code:

IARC: 1, 2A, 2B, 3, 4
NTP: Known to be a human carcinogen; Reasonably anticipated to be a human carcinogen
OSHA: +
Not listed/not regulated: -

Reproductive toxicity

Product/ingredient name	Maternal toxicity	Fertility	Development toxin	Species	Dose	Exposure
5-methylhexan-2-one	-	-	Equivocal	Rabbit	Inhalation: 1250 ppm	-

Conclusion/Summary : There are no data available on the mixture itself.

Teratogenicity

Conclusion/Summary : There are no data available on the mixture itself.

Specific target organ toxicity (single exposure)

Section 11. Toxicological information

Name	Category	Route of exposure	Target organs
4-chloro-α,α,α-trifluorotoluene	Category 3	-	Respiratory tract irritation
4-methylpentan-2-one	Category 3	-	Respiratory tract irritation

Specific target organ toxicity (repeated exposure)

Not available.

Target organs : Contains material which causes damage to the following organs: brain, central nervous system (CNS).
Contains material which may cause damage to the following organs: kidneys, liver, upper respiratory tract, skin, eyes, adrenal.

Aspiration hazard

Not available.

Information on the likely routes of exposure

Potential acute health effects

Eye contact : Causes serious eye irritation.
Inhalation : Harmful if inhaled. May cause respiratory irritation.
Skin contact : Causes skin irritation. Defatting to the skin.
Ingestion : No known significant effects or critical hazards.

Over-exposure signs/symptoms

Eye contact : Adverse symptoms may include the following:
pain or irritation
watering
redness

Inhalation : Adverse symptoms may include the following:
respiratory tract irritation
coughing
reduced fetal weight
increase in fetal deaths
skeletal malformations

Skin contact : Adverse symptoms may include the following:
irritation
redness
dryness
cracking
reduced fetal weight
increase in fetal deaths
skeletal malformations

Ingestion : Adverse symptoms may include the following:
reduced fetal weight
increase in fetal deaths
skeletal malformations

Delayed and immediate effects and also chronic effects from short and long term exposure

Section 11. Toxicological information

Conclusion/Summary : There are no data available on the mixture itself. Exposure to component solvent vapor concentrations in excess of the stated occupational exposure limit may result in adverse health effects such as mucous membrane and respiratory system irritation and adverse effects on the kidneys, liver and central nervous system. Symptoms and signs include headache, dizziness, fatigue, muscular weakness, drowsiness and, in extreme cases, loss of consciousness. Solvents may cause some of the above effects by absorption through the skin. There is some evidence that repeated exposure to organic solvent vapors in combination with constant loud noise can cause greater hearing loss than expected from exposure to noise alone. If splashed in the eyes, the liquid may cause irritation and reversible damage. Ingestion may cause nausea, diarrhea and vomiting. This takes into account, where known, delayed and immediate effects and also chronic effects of components from short-term and long-term exposure by oral, inhalation and dermal routes of exposure and eye contact.

Short term exposure

Potential immediate effects : There are no data available on the mixture itself.

Potential delayed effects : There are no data available on the mixture itself.

Long term exposure

Potential immediate effects : There are no data available on the mixture itself.

Potential delayed effects : There are no data available on the mixture itself.

Potential chronic health effects

General : Prolonged or repeated contact can defat the skin and lead to irritation, cracking and/or dermatitis.

Carcinogenicity : Suspected of causing cancer. Risk of cancer depends on duration and level of exposure.

Mutagenicity : No known significant effects or critical hazards.

Reproductive toxicity : Suspected of damaging fertility or the unborn child.

Numerical measures of toxicity

Acute toxicity estimates

Product/ingredient name	Oral (mg/kg)	Dermal (mg/kg)	Inhalation (gases) (ppm)	Inhalation (vapors) (mg/l)	Inhalation (dusts and mists) (mg/l)
MID TEMP REDUCER	9050	4586.7	26103.3	32.1	4.2
4-chloro-α,α,α-trifluorotoluene	13000	2500	N/A	33.08	N/A
5-methylhexan-2-one	5657	8140	5000	11	1.5
4-methylpentan-2-one	2080	N/A	N/A	12.3	1.5
2-ethylhexyl acetate	3000	N/A	N/A	N/A	N/A

Section 12. Ecological information

Toxicity

Product/ingredient name	Result	Species	Exposure
5-methylhexan-2-one	Acute LC50 159 mg/l	Fish	96 hours
4-methylpentan-2-one	Acute LC50 >179 mg/l	Fish	96 hours

Persistence and degradability

Product/ingredient name	Test	Result	Dose	Inoculum
5-methylhexan-2-one	OECD 301D	67 % - Readily - 28 days	-	-
4-methylpentan-2-one	OECD 301F	83 % - Readily - 28 days	-	-

Product/ingredient name	Aquatic half-life	Photolysis	Biodegradability
5-methylhexan-2-one	-	-	Readily
4-methylpentan-2-one	-	-	Readily

Bioaccumulative potential

Product/ingredient name	$LogP_{ow}$	BCF	Potential
5-methylhexan-2-one	1.88	-	low
4-methylpentan-2-one	1.31	-	low

Mobility in soil

Soil/water partition coefficient (K_{oc}) : Not available.

Section 13. Disposal considerations

Disposal methods : The generation of waste should be avoided or minimized wherever possible. Disposal of this product, solutions and any by-products should at all times comply with the requirements of environmental protection and waste disposal legislation and any regional local authority requirements. Dispose of surplus and non-recyclable products via a licensed waste disposal contractor. Waste should not be disposed of untreated to the sewer unless fully compliant with the requirements of all authorities with jurisdiction. Waste packaging should be recycled. Incineration or landfill should only be considered when recycling is not feasible. This material and its container must be disposed of in a safe way. Care should be taken when handling emptied containers that have not been cleaned or rinsed out. Empty containers or liners may retain some product residues. Vapor from product residues may create a highly flammable or explosive atmosphere inside the container. Do not cut, weld or grind used containers unless they have been cleaned thoroughly internally. Avoid dispersal of spilled material and runoff and contact with soil, waterways, drains and sewers.

Disposal should be in accordance with applicable regional, national and local laws and regulations.

Refer to Section 7: HANDLING AND STORAGE and Section 8: EXPOSURE CONTROLS/PERSONAL PROTECTION for additional handling information and protection of employees. Section 6. Accidental release measures

14. Transport information

	DOT	IMDG	IATA
UN number	UN1263	UN1263	UN1263
UN proper shipping name	PAINT RELATED MATERIAL	PAINT RELATED MATERIAL	PAINT RELATED MATERIAL
Transport hazard class (es)	3	3	3
Packing group	III	III	III
Environmental hazards	No.	No.	No.
Marine pollutant substances	Not applicable.	Not applicable.	Not applicable.
Product RQ (lbs)	29636	Not applicable.	Not applicable.
RQ substances	(4-methylpentan-2-one)	Not applicable.	Not applicable.

Additional information

DOT : Package sizes shipped in quantities less than the product reportable quantity are not subject to the RQ (reportable quantity) transportation requirements.

IMDG : None identified.

IATA : None identified.

Special precautions for user : **Transport within user's premises:** always transport in closed containers that are upright and secure. Ensure that persons transporting the product know what to do in the event of an accident or spillage.

Transport in bulk according to IMO instruments : Not applicable.

Section 15. Regulatory information

United States

United States inventory (TSCA 8b) : All components are active or exempted.

United States - TSCA 12(b) - Chemical export notification:

4-chloro-α,α,α-trifluorotoluene — One time notification

United States - TSCA 5(a)2 - Final significant new use rules:

4-chloro-α,α,α-trifluorotoluene — Listed — 40 CFR 799.5089

SARA 302/304

SARA 304 RQ : Not applicable.

Composition/information on ingredients

No products were found.

SARA 311/312

Section 15. Regulatory information

Classification : FLAMMABLE LIQUIDS - Category 3
ACUTE TOXICITY (inhalation) - Category 4
SKIN IRRITATION - Category 2
EYE IRRITATION - Category 2A
CARCINOGENICITY - Category 2
TOXIC TO REPRODUCTION - Category 2
SPECIFIC TARGET ORGAN TOXICITY (SINGLE EXPOSURE) (Respiratory tract irritation) - Category 3
HNOC - Defatting irritant

Composition/information on ingredients

Name	%	Classification
[redacted]-chloro-α,α,α-trifluorotoluene	≥50 - ≤75	FLAMMABLE LIQUIDS - Category 3 SKIN IRRITATION - Category 2 EYE IRRITATION - Category 2A CARCINOGENICITY - Category 2 SPECIFIC TARGET ORGAN TOXICITY (SINGLE EXPOSURE) (Respiratory tract irritation) - Category 3 HNOC - Defatting irritant
5-methylhexan-2-one	≥10 - ≤20	FLAMMABLE LIQUIDS - Category 3 ACUTE TOXICITY (inhalation) - Category 4 TOXIC TO REPRODUCTION - Category 2 HNOC - Defatting irritant
4-methylpentan-2-one	≥10 - ≤20	FLAMMABLE LIQUIDS - Category 2 ACUTE TOXICITY (inhalation) - Category 4 EYE IRRITATION - Category 2A CARCINOGENICITY - Category 2 SPECIFIC TARGET ORGAN TOXICITY (SINGLE EXPOSURE) (Respiratory tract irritation) - Category 3 HNOC - Defatting irritant
2-ethylhexyl acetate	≥5.0 - ≤10	SKIN IRRITATION - Category 2

SARA 313

	Chemical name	CAS number	Concentration
Supplier notification :	4-methylpentan-2-one	108-10-1	10 - 30

SARA 313 notifications must not be detached from the SDS and any copying and redistribution of the SDS shall include copying and redistribution of the notice attached to copies of the SDS subsequently redistributed.

Additional environmental information is contained on the Environmental Data Sheet for this product, which can be obtained from your PPG representative.

California Prop. 65

⚠ **WARNING**: Cancer and Reproductive Harm - www.P65Warnings.ca.gov.

Section 16. Other information

Hazardous Material Information System (U.S.A.)

Health : 2 * **Flammability** : 3 **Physical hazards** : 0
(*) - Chronic effects

Caution: HMIS® ratings are based on a 0-4 rating scale, with 0 representing minimal hazards or risks, and 4 representing significant hazards or risks. Although HMIS® ratings and the associated label are not required on MSDSs or products leaving a facility under 29 CFR 1910.1200, the preparer may choose to provide them. HMIS® ratings are to be used with a fully implemented HMIS® program. HMIS® is a registered trademark and service mark of the American Coatings Association, Inc.

The customer is responsible for determining the PPE code for this material. For more information on HMIS® Personal Protective Equipment (PPE) codes, consult the HMIS® Implementation Manual.

National Fire Protection Association (U.S.A.)

Health : 2 **Flammability** : 3 **Instability** : 0

Date of previous issue : **7/2/2020**

Organization that prepared the MSDS : EHS

Key to abbreviations : ATE = Acute Toxicity Estimate
BCF = Bioconcentration Factor
GHS = Globally Harmonized System of Classification and Labelling of Chemicals
IATA = International Air Transport Association
IBC = Intermediate Bulk Container
IMDG = International Maritime Dangerous Goods
LogPow = logarithm of the octanol/water partition coefficient
MARPOL = International Convention for the Prevention of Pollution From Ships, 1973 as modified by the Protocol of 1978. ("Marpol" = marine pollution)
N/A = Not available
SGG = Segregation Group
UN = United Nations

◤ **Indicates information that has changed from previously issued version.**

Disclaimer

The information contained in this data sheet is based on present scientific and technical knowledge. The purpose of this information is to draw attention to the health and safety aspects concerning the products supplied by PPG, and to recommend precautionary measures for the storage and handling of the products. No warranty or guarantee is given in respect of the properties of the products. No liability can be accepted for any failure to observe the precautionary measures described in this data sheet or for any misuse of the products.

SAFETY DATA SHEET

Date of issue/Date of revision **9 September 2020**
Version 12.01

Section 1. Identification

Product name	: ETCH PRIME CATALYST
Product code	: SX1072
Other means of identification	: Not available.
Product type	: Liquid.

Relevant identified uses of the substance or mixture and uses advised against

Product use	: Industrial applications.
Use of the substance/ mixture	: Coating. Paints. Painting-related materials.
Uses advised against	: Not applicable.

Manufacturer	: PPG Industries, Inc. One PPG Place, Pittsburgh, PA 15272
Emergency telephone number	: (412) 434-4515 (U.S.) (514) 645-1320 (Canada) SETIQ Interior de la República: 800-00-214-00 (México) SETIQ Ciudad de México: (55) 5559-1588 (México)
Technical Phone Number	: 1-800-647-6050

Section 2. Hazards identification

OSHA/HCS status	: This material is considered hazardous by the OSHA Hazard Communication Standard (29 CFR 1910.1200).
Classification of the substance or mixture	: FLAMMABLE LIQUIDS - Category 2 SKIN IRRITATION - Category 2 SERIOUS EYE DAMAGE - Category 1 CARCINOGENICITY - Category 2 SPECIFIC TARGET ORGAN TOXICITY (SINGLE EXPOSURE) (Respiratory tract irritation) - Category 3 SPECIFIC TARGET ORGAN TOXICITY (SINGLE EXPOSURE) (Narcotic effects) - Category 3 Percentage of the mixture consisting of ingredient(s) of unknown acute inhalation toxicity: 1.9%

GHS label elements

Section 2. Hazards identification

Hazard pictograms :

Signal word : Danger

Hazard statements : Highly flammable liquid and vapor.
Causes skin irritation.
Causes serious eye damage.
May cause respiratory irritation.
May cause drowsiness or dizziness.
Suspected of causing cancer.

Precautionary statements

Prevention : Obtain special instructions before use. Do not handle until all safety precautions have been read and understood. Wear protective gloves, protective clothing and eye or face protection. Keep away from heat, hot surfaces, sparks, open flames and other ignition sources. No smoking. Use explosion-proof electrical, ventilating or lighting equipment. Use non-sparking tools. Take action to prevent static discharges. Use only outdoors or in a well-ventilated area. Avoid breathing vapor. Wash thoroughly after handling.

Response : IF exposed or concerned: Get medical advice or attention. IF INHALED: Remove person to fresh air and keep comfortable for breathing. Call a POISON CENTER or doctor if you feel unwell. IF ON SKIN (or hair): Take off immediately all contaminated clothing. Rinse skin with water. IF ON SKIN: Wash with plenty of water. If skin irritation occurs: Get medical advice or attention. IF IN EYES: Rinse cautiously with water for several minutes. Remove contact lenses, if present and easy to do. Continue rinsing. Immediately call a POISON CENTER or doctor.

Storage : Store locked up. Store in a well-ventilated place. Keep container tightly closed. Keep cool.

Disposal : Dispose of contents and container in accordance with all local, regional, national and international regulations.

Supplemental label elements : Repeated exposure to high vapor concentrations may cause irritation of the respiratory system and permanent brain and nervous system damage. Inhalation of vapor/aerosol concentrations above the recommended exposure limits causes headaches, drowsiness and nausea and may lead to unconsciousness or death. Avoid contact with skin and clothing. Wash thoroughly after handling. Emits toxic fumes when heated.

Hazards not otherwise classified : Prolonged or repeated contact may dry skin and cause irritation.

Section 3. Composition/information on ingredients

Substance/mixture : Mixture

Product name : ETCH PRIME CATALYST

Ingredient name	%	CAS number
4-chloro-α,α,α-trifluorotoluene	≥50 - ≤75	98-56-6
acetone	≥10 - ≤20	67-64-1
butan-1-ol	≥5.0 - ≤10	71-36-3
Phosphoric acid, solution	≥0.10 - ≤2.7	7664-38-2

Section 3. Composition/information on ingredients

SUB codes represent substances without registered CAS Numbers.

Any concentration shown as a range is to protect confidentiality or is due to batch variation.

There are no additional ingredients present which, within the current knowledge of the supplier and in the concentrations applicable, are classified as hazardous to health or the environment and hence require reporting in this section.

Occupational exposure limits, if available, are listed in Section 8.

Section 4. First aid measures

If ingestion, irritation, any type of overexposure or symptoms of overexposure occur during or persists after use of this product, contact a POISON CONTROL CENTER, EMERGENCY ROOM OR PHYSICIAN immediately; have Safety Data Sheet information available. Never give anything by mouth to an unconscious or convulsing person.

Description of necessary first aid measures

Eye contact : Check for and remove any contact lenses. Immediately flush eyes with running water for at least 15 minutes, keeping eyelids open. Seek immediate medical attention.

Inhalation : Remove to fresh air. Keep person warm and at rest. If not breathing, if breathing is irregular or if respiratory arrest occurs, provide artificial respiration or oxygen by trained personnel.

Skin contact : Remove contaminated clothing and shoes. Wash skin thoroughly with soap and water or use recognized skin cleanser. Do NOT use solvents or thinners.

Ingestion : If swallowed, seek medical advice immediately and show this container or label. Keep person warm and at rest. Do NOT induce vomiting.

Most important symptoms/effects, acute and delayed

Potential acute health effects

Eye contact : Causes serious eye damage.

Inhalation : Can cause central nervous system (CNS) depression. May cause drowsiness or dizziness. May cause respiratory irritation.

Skin contact : Causes skin irritation. Defatting to the skin.

Ingestion : Can cause central nervous system (CNS) depression.

Over-exposure signs/symptoms

Eye contact : Adverse symptoms may include the following:
pain
watering
redness

Inhalation : Adverse symptoms may include the following:
respiratory tract irritation
coughing
nausea or vomiting
headache
drowsiness/fatigue
dizziness/vertigo
unconsciousness

Skin contact : Adverse symptoms may include the following:
pain or irritation
redness
dryness
cracking
blistering may occur

Section 4. First aid measures

Ingestion : Adverse symptoms may include the following:
stomach pains

Indication of immediate medical attention and special treatment needed, if necessary

Notes to physician : In case of inhalation of decomposition products in a fire, symptoms may be delayed. The exposed person may need to be kept under medical surveillance for 48 hours.

Specific treatments : No specific treatment.

Protection of first-aiders : No action shall be taken involving any personal risk or without suitable training. If it is suspected that fumes are still present, the rescuer should wear an appropriate mask or self-contained breathing apparatus. It may be dangerous to the person providing aid to give mouth-to-mouth resuscitation. Wash contaminated clothing thoroughly with water before removing it, or wear gloves.

See toxicological information (Section 11)

Section 5. Fire-fighting measures

Extinguishing media

Suitable extinguishing media : Use dry chemical, CO_2, water spray (fog) or foam.

Unsuitable extinguishing media : Do not use water jet.

Specific hazards arising from the chemical : Highly flammable liquid and vapor. In a fire or if heated, a pressure increase will occur and the container may burst, with the risk of a subsequent explosion. Runoff to sewer may create fire or explosion hazard.

Hazardous thermal decomposition products : Decomposition products may include the following materials:
carbon oxides
phosphorus oxides
halogenated compounds
carbonyl halides

Special protective actions for fire-fighters : Promptly isolate the scene by removing all persons from the vicinity of the incident if there is a fire. No action shall be taken involving any personal risk or without suitable training. Move containers from fire area if this can be done without risk. Use water spray to keep fire-exposed containers cool.

Special protective equipment for fire-fighters : Fire-fighters should wear appropriate protective equipment and self-contained breathing apparatus (SCBA) with a full face-piece operated in positive pressure mode.

Section 6. Accidental release measures

Personal precautions, protective equipment and emergency procedures

For non-emergency personnel : No action shall be taken involving any personal risk or without suitable training. Evacuate surrounding areas. Keep unnecessary and unprotected personnel from entering. Do not touch or walk through spilled material. Shut off all ignition sources. No flares, smoking or flames in hazard area. Do not breathe vapor or mist. Provide adequate ventilation. Wear appropriate respirator when ventilation is inadequate. Put on appropriate personal protective equipment.

Section 6. Accidental release measures

For emergency responders : If specialized clothing is required to deal with the spillage, take note of any information in Section 8 on suitable and unsuitable materials. See also the information in "For non-emergency personnel".

Environmental precautions : Avoid dispersal of spilled material and runoff and contact with soil, waterways, drains and sewers. Inform the relevant authorities if the product has caused environmental pollution (sewers, waterways, soil or air).

Methods and materials for containment and cleaning up

Small spill : Stop leak if without risk. Move containers from spill area. Use spark-proof tools and explosion-proof equipment. Dilute with water and mop up if water-soluble. Alternatively, or if water-insoluble, absorb with an inert dry material and place in an appropriate waste disposal container. Dispose of via a licensed waste disposal contractor.

Large spill : Stop leak if without risk. Move containers from spill area. Use spark-proof tools and explosion-proof equipment. Approach release from upwind. Prevent entry into sewers, water courses, basements or confined areas. Wash spillages into an effluent treatment plant or proceed as follows. Contain and collect spillage with non-combustible, absorbent material e.g. sand, earth, vermiculite or diatomaceous earth and place in container for disposal according to local regulations (see Section 13). Dispose of via a licensed waste disposal contractor. Contaminated absorbent material may pose the same hazard as the spilled product. Note: see Section 1 for emergency contact information and Section 13 for waste disposal.

Section 7. Handling and storage

Precautions for safe handling

Protective measures : Put on appropriate personal protective equipment (see Section 8). Avoid exposure - obtain special instructions before use. Do not handle until all safety precautions have been read and understood. Do not get in eyes or on skin or clothing. Do not breathe vapor or mist. Do not ingest. Use only with adequate ventilation. Wear appropriate respirator when ventilation is inadequate. Do not enter storage areas and confined spaces unless adequately ventilated. Keep in the original container or an approved alternative made from a compatible material, kept tightly closed when not in use. Store and use away from heat, sparks, open flame or any other ignition source. Use explosion-proof electrical (ventilating, lighting and material handling) equipment. Use only non-sparking tools. Take precautionary measures against electrostatic discharges. Empty containers retain product residue and can be hazardous. Do not reuse container.

Special precautions : If this material is part of a multiple component system, read the Safety Data Sheet(s) for the other component or components before blending as the resulting mixture may have the hazards of all of its parts.

Advice on general occupational hygiene : Eating, drinking and smoking should be prohibited in areas where this material is handled, stored and processed. Workers should wash hands and face before eating, drinking and smoking. Remove contaminated clothing and protective equipment before entering eating areas. See also Section 8 for additional information on hygiene measures.

Section 7. Handling and storage

Conditions for safe storage, including any incompatibilities : Do not store below the following temperature: 5°C (41°F). Store in accordance with local regulations. Store in a segregated and approved area. Store in original container protected from direct sunlight in a dry, cool and well-ventilated area, away from incompatible materials (see Section 10) and food and drink. Store locked up. Eliminate all ignition sources. Separate from oxidizing materials. Keep container tightly closed and sealed until ready for use. Containers that have been opened must be carefully resealed and kept upright to prevent leakage. Do not store in unlabeled containers. Use appropriate containment to avoid environmental contamination.

Section 8. Exposure controls/personal protection

Control parameters

Occupational exposure limits

Ingredient name	Exposure limits
4-chloro-α,α,α-trifluorotoluene	**IPEL (PPG).** TWA: 0.57 ppm STEL: 1.71 ppm
acetone	**ACGIH TLV (United States, 3/2019).** STEL: 500 ppm 15 minutes. TWA: 250 ppm 8 hours. **OSHA PEL (United States, 5/2018).** TWA: 2400 mg/m³ 8 hours. TWA: 1000 ppm 8 hours.
butan-1-ol	**ACGIH TLV (United States, 3/2019).** TWA: 20 ppm 8 hours. **OSHA PEL (United States, 5/2018).** TWA: 300 mg/m³ 8 hours. TWA: 100 ppm 8 hours.
Phosphoric acid, solution	**ACGIH TLV (United States, 3/2019).** STEL: 3 mg/m³ 15 minutes. TWA: 1 mg/m³ 8 hours. **OSHA PEL (United States, 5/2018).** TWA: 1 mg/m³ 8 hours.

Key to abbreviations

A = Acceptable Maximum Peak
ACGIH = American Conference of Governmental Industrial Hygienists.
C = Ceiling Limit
F = Fume
IPEL = Internal Permissible Exposure Limit
OSHA = Occupational Safety and Health Administration.
R = Respirable
Z = OSHA 29 CFR 1910.1200 Subpart Z - Toxic and Hazardous Substances
S = Potential skin absorption
SR = Respiratory sensitization
SS = Skin sensitization
STEL = Short term Exposure limit values
TD = Total dust
TLV = Threshold Limit Value
TWA = Time Weighted Average

Consult local authorities for acceptable exposure limits.

Recommended monitoring procedures : If this product contains ingredients with exposure limits, personal, workplace atmosphere or biological monitoring may be required to determine the effectiveness of the ventilation or other control measures and/or the necessity to use respiratory protective equipment. Reference should be made to appropriate monitoring standards. Reference to national guidance documents for methods for the determination of hazardous substances will also be required.

Section 8. Exposure controls/personal protection

Appropriate engineering controls : Use only with adequate ventilation. Use process enclosures, local exhaust ventilation or other engineering controls to keep worker exposure to airborne contaminants below any recommended or statutory limits. The engineering controls also need to keep gas, vapor or dust concentrations below any lower explosive limits. Use explosion-proof ventilation equipment.

Environmental exposure controls : Emissions from ventilation or work process equipment should be checked to ensure they comply with the requirements of environmental protection legislation. In some cases, fume scrubbers, filters or engineering modifications to the process equipment will be necessary to reduce emissions to acceptable levels.

Individual protection measures

Hygiene measures : Wash hands, forearms and face thoroughly after handling chemical products, before eating, smoking and using the lavatory and at the end of the working period. Appropriate techniques should be used to remove potentially contaminated clothing. Wash contaminated clothing before reusing. Ensure that eyewash stations and safety showers are close to the workstation location.

Eye/face protection : Chemical splash goggles and face shield.

Skin protection

Hand protection : Chemical-resistant, impervious gloves complying with an approved standard should be worn at all times when handling chemical products if a risk assessment indicates this is necessary. Considering the parameters specified by the glove manufacturer, check during use that the gloves are still retaining their protective properties. It should be noted that the time to breakthrough for any glove material may be different for different glove manufacturers. In the case of mixtures, consisting of several substances, the protection time of the gloves cannot be accurately estimated.

Gloves : For prolonged or repeated handling, use the following type of gloves:

Recommended: butyl rubber, neoprene
May be used: nitrile rubber

Body protection : Personal protective equipment for the body should be selected based on the task being performed and the risks involved and should be approved by a specialist before handling this product. When there is a risk of ignition from static electricity, wear anti-static protective clothing. For the greatest protection from static discharges, clothing should include anti-static overalls, boots and gloves.

Other skin protection : Appropriate footwear and any additional skin protection measures should be selected based on the task being performed and the risks involved and should be approved by a specialist before handling this product.

Respiratory protection : Respirator selection must be based on known or anticipated exposure levels, the hazards of the product and the safe working limits of the selected respirator. If workers are exposed to concentrations above the exposure limit, they must use appropriate, certified respirators. Use a properly fitted, air-purifying or air-fed respirator complying with an approved standard if a risk assessment indicates this is necessary.

Section 9. Physical and chemical properties

Appearance

Physical state	:	Liquid.
Color	:	Not available.
Odor	:	Not available.
Odor threshold	:	Not available.
pH	:	Not available.
Melting point	:	Not available.
Boiling point	:	>37.78°C (>100°F)
Flash point	:	Closed cup: -4.44°C (24°F)
Auto-ignition temperature	:	Not available.
Decomposition temperature	:	Not available.
Flammability (solid, gas)	:	Not available.
Lower and upper explosive (flammable) limits	:	Not available.
Evaporation rate	:	Not available.
Vapor pressure	:	Not available.
Vapor density	:	Not available.
Relative density	:	1.15
Density (lbs / gal)	:	9.6
Solubility	:	Partially soluble in the following materials: cold water.
Partition coefficient: n-octanol/water	:	Not available.
Viscosity	:	Kinematic (40°C (104°F)): >0.21 cm^2/s (>21 cSt)
Volatility	:	99% (v/v), 98.107% (w/w)
% Solid. (w/w)	:	1.893

Section 10. Stability and reactivity

Reactivity	:	No specific test data related to reactivity available for this product or its ingredients.
Chemical stability	:	The product is stable.
Possibility of hazardous reactions	:	Under normal conditions of storage and use, hazardous reactions will not occur.
Conditions to avoid	:	When exposed to high temperatures may produce hazardous decomposition products. Refer to protective measures listed in sections 7 and 8.
Incompatible materials	:	Keep away from the following materials to prevent strong exothermic reactions: oxidizing agents, strong alkalis, strong acids.
Hazardous decomposition products	:	Decomposition products may include the following materials: carbon monoxide, carbon dioxide, smoke, oxides of nitrogen.

Section 11. Toxicological information

Information on toxicological effects

Acute toxicity

Product/ingredient name	Result	Species	Dose	Exposure
4-chloro-α,α,α-trifluorotoluene	LC50 Inhalation Vapor	Rat	33080 mg/m³	4 hours
	LD50 Dermal	Rabbit	>2.7 g/kg	-
	LD50 Oral	Rat	13 g/kg	-
acetone	LC50 Inhalation Vapor	Rat	76000 mg/m³	4 hours
	LD50 Dermal	Rabbit	15.8 g/kg	-
	LD50 Oral	Rat	5800 mg/kg	-
butan-1-ol	LC50 Inhalation Vapor	Rat	24000 mg/m³	4 hours
	LC50 Inhalation Vapor	Rat	8000 ppm	4 hours
	LD50 Dermal	Rabbit	3400 mg/kg	-
	LD50 Oral	Rat	790 mg/kg	-
Phosphoric acid, solution	LD50 Dermal	Rabbit	2.74 g/kg	-
	LD50 Oral	Rat	1.25 g/kg	-

Conclusion/Summary : There are no data available on the mixture itself.

Irritation/Corrosion

Conclusion/Summary

Skin : There are no data available on the mixture itself.

Eyes : There are no data available on the mixture itself.

Respiratory : There are no data available on the mixture itself.

Sensitization

Conclusion/Summary

Skin : There are no data available on the mixture itself.

Respiratory : There are no data available on the mixture itself.

Mutagenicity

Conclusion/Summary : There are no data available on the mixture itself.

Carcinogenicity

Conclusion/Summary : There are no data available on the mixture itself.

Classification

Product/ingredient name	OSHA	IARC	NTP
4-chloro-α,α,α-trifluorotoluene	-	2B	-

Carcinogen Classification code:

IARC: 1, 2A, 2B, 3, 4
NTP: Known to be a human carcinogen; Reasonably anticipated to be a human carcinogen
OSHA: +
Not listed/not regulated: -

Reproductive toxicity

Conclusion/Summary : There are no data available on the mixture itself.

Teratogenicity

Conclusion/Summary : There are no data available on the mixture itself.

Specific target organ toxicity (single exposure)

Section 11. Toxicological information

Name	Category	Route of exposure	Target organs
4-chloro-α,α,α-trifluorotoluene	Category 3	-	Respiratory tract irritation
acetone	Category 3	-	Narcotic effects
butan-1-ol	Category 3	-	Respiratory tract irritation
	Category 3		Narcotic effects

Specific target organ toxicity (repeated exposure)

Not available.

Target organs : Contains material which causes damage to the following organs: brain, central nervous system (CNS).
Contains material which may cause damage to the following organs: blood, kidneys, lungs, liver, gastrointestinal tract, upper respiratory tract, skin, adrenal, ears, eye, lens or cornea.

Aspiration hazard

Not available.

Information on the likely routes of exposure

Potential acute health effects

Eye contact : Causes serious eye damage.

Inhalation : Can cause central nervous system (CNS) depression. May cause drowsiness or dizziness. May cause respiratory irritation.

Skin contact : Causes skin irritation. Defatting to the skin.

Ingestion : Can cause central nervous system (CNS) depression.

Over-exposure signs/symptoms

Eye contact : Adverse symptoms may include the following:
pain
watering
redness

Inhalation : Adverse symptoms may include the following:
respiratory tract irritation
coughing
nausea or vomiting
headache
drowsiness/fatigue
dizziness/vertigo
unconsciousness

Skin contact : Adverse symptoms may include the following:
pain or irritation
redness
dryness
cracking
blistering may occur

Ingestion : Adverse symptoms may include the following:
stomach pains

Delayed and immediate effects and also chronic effects from short and long term exposure

Section 11. Toxicological information

Conclusion/Summary : There are no data available on the mixture itself. Exposure to component solvent vapor concentrations in excess of the stated occupational exposure limit may result in adverse health effects such as mucous membrane and respiratory system irritation and adverse effects on the kidneys, liver and central nervous system. Symptoms and signs include headache, dizziness, fatigue, muscular weakness, drowsiness and, in extreme cases, loss of consciousness. Solvents may cause some of the above effects by absorption through the skin. There is some evidence that repeated exposure to organic solvent vapors in combination with constant loud noise can cause greater hearing loss than expected from exposure to noise alone. If splashed in the eyes, the liquid may cause irritation and reversible damage. Ingestion may cause nausea, diarrhea and vomiting. This takes into account, where known, delayed and immediate effects and also chronic effects of components from short-term and long-term exposure by oral, inhalation and dermal routes of exposure and eye contact.

Short term exposure

Potential immediate effects : There are no data available on the mixture itself.

Potential delayed effects : There are no data available on the mixture itself.

Long term exposure

Potential immediate effects : There are no data available on the mixture itself.

Potential delayed effects : There are no data available on the mixture itself.

Potential chronic health effects

General : Prolonged or repeated contact can defat the skin and lead to irritation, cracking and/or dermatitis.

Carcinogenicity : Suspected of causing cancer. Risk of cancer depends on duration and level of exposure.

Mutagenicity : No known significant effects or critical hazards.

Reproductive toxicity : No known significant effects or critical hazards.

Numerical measures of toxicity

Acute toxicity estimates

Product/ingredient name	Oral (mg/kg)	Dermal (mg/kg)	Inhalation (gases) (ppm)	Inhalation (vapors) (mg/l)	Inhalation (dusts and mists) (mg/l)
ETCH PRIME CATALYST	7212	3118.4	N/A	N/A	N/A
4-chloro-α,α,α-trifluorotoluene	13000	2500	N/A	33.08	N/A
acetone	5800	15800	N/A	76	N/A
butan-1-ol	790	3400	N/A	24	N/A
Phosphoric acid, solution	1250	2740	N/A	N/A	N/A

Section 12. Ecological information

Toxicity

Product/ingredient name	Result	Species	Exposure
acetone	Acute LC50 4.42589 ml/L Marine water	Crustaceans - Acartia tonsa - Copepodid	48 hours
	Acute LC50 5540 mg/l	Fish	96 hours
butan-1-ol	Acute LC50 1376 mg/l	Fish	96 hours

Persistence and degradability

Product/ingredient name	Test	Result	Dose	Inoculum
acetone	-	90.9 % - Readily - 28 days	-	-

Product/ingredient name	Aquatic half-life	Photolysis	Biodegradability
acetone	-	-	Readily

Bioaccumulative potential

Product/ingredient name	$LogP_{ow}$	BCF	Potential
acetone	-0.24	3	low
butan-1-ol	0.88	-	low

Mobility in soil

Soil/water partition coefficient (K_{oc}) : Not available.

Section 13. Disposal considerations

Disposal methods : The generation of waste should be avoided or minimized wherever possible. Disposal of this product, solutions and any by-products should at all times comply with the requirements of environmental protection and waste disposal legislation and any regional local authority requirements. Dispose of surplus and non-recyclable products via a licensed waste disposal contractor. Waste should not be disposed of untreated to the sewer unless fully compliant with the requirements of all authorities with jurisdiction. Waste packaging should be recycled. Incineration or landfill should only be considered when recycling is not feasible. This material and its container must be disposed of in a safe way. Care should be taken when handling emptied containers that have not been cleaned or rinsed out. Empty containers or liners may retain some product residues. Vapor from product residues may create a highly flammable or explosive atmosphere inside the container. Do not cut, weld or grind used containers unless they have been cleaned thoroughly internally. Avoid dispersal of spilled material and runoff and contact with soil, waterways, drains and sewers.

Disposal should be in accordance with applicable regional, national and local laws and regulations.

Refer to Section 7: HANDLING AND STORAGE and Section 8: EXPOSURE CONTROLS/PERSONAL PROTECTION for additional handling information and protection of employees. Section 6. Accidental release measures

14. Transport information

	DOT	IMDG	IATA
UN number	UN1263	UN1263	UN1263
UN proper shipping name	PAINT	PAINT	PAINT
Transport hazard class (es)	3	3	3
Packing group	II	II	II
Environmental hazards	No.	No.	No.
Marine pollutant substances	Not applicable.	Not applicable.	Not applicable.
Product RQ (lbs)	31328.7	Not applicable.	Not applicable.
RQ substances	(acetone)	Not applicable.	Not applicable.

Additional information

DOT : Package sizes shipped in quantities less than the product reportable quantity are not subject to the RQ (reportable quantity) transportation requirements.

IMDG : None identified.

IATA : None identified.

Special precautions for user : **Transport within user's premises:** always transport in closed containers that are upright and secure. Ensure that persons transporting the product know what to do in the event of an accident or spillage.

Transport in bulk according to IMO instruments : Not applicable.

Section 15. Regulatory information

United States

United States inventory (TSCA 8b) : All components are active or exempted.

U.S. Federal regulations :

United States - TSCA 12(b) - Chemical export notification:

4-chloro-α,α,α-trifluorotoluene — One time notification

United States - TSCA 5(a)2 - Final significant new use rules:

4-chloro-α,α,α-trifluorotoluene — Listed — 40 CFR 799.5089

SARA 302/304

SARA 304 RQ : Not applicable.

Composition/information on ingredients

No products were found.

SARA 311/312

Section 15. Regulatory information

Classification : FLAMMABLE LIQUIDS - Category 2
SKIN IRRITATION - Category 2
SERIOUS EYE DAMAGE - Category 1
CARCINOGENICITY - Category 2
SPECIFIC TARGET ORGAN TOXICITY (SINGLE EXPOSURE) (Respiratory tract irritation) - Category 3
SPECIFIC TARGET ORGAN TOXICITY (SINGLE EXPOSURE) (Narcotic effects) - Category 3
HNOC - Defatting irritant

Composition/information on ingredients

Name	%	Classification
4-chloro-α,α,α-trifluorotoluene	≥50 - ≤75	FLAMMABLE LIQUIDS - Category 3 SKIN IRRITATION - Category 2 EYE IRRITATION - Category 2A CARCINOGENICITY - Category 2 SPECIFIC TARGET ORGAN TOXICITY (SINGLE EXPOSURE) (Respiratory tract irritation) - Category 3 HNOC - Defatting irritant
acetone	≥10 - ≤20	FLAMMABLE LIQUIDS - Category 2 EYE IRRITATION - Category 2A SPECIFIC TARGET ORGAN TOXICITY (SINGLE EXPOSURE) (Narcotic effects) - Category 3 HNOC - Defatting irritant
butan-1-ol	≥5.0 - ≤10	FLAMMABLE LIQUIDS - Category 3 ACUTE TOXICITY (oral) - Category 4 SKIN IRRITATION - Category 2 SERIOUS EYE DAMAGE - Category 1 SPECIFIC TARGET ORGAN TOXICITY (SINGLE EXPOSURE) (Respiratory tract irritation) - Category 3 SPECIFIC TARGET ORGAN TOXICITY (SINGLE EXPOSURE) (Narcotic effects) - Category 3 HNOC - Defatting irritant
Phosphoric acid, solution	≥0.10 - ≤2.7	CORROSIVE TO METALS - Category 1 ACUTE TOXICITY (oral) - Category 4 SKIN CORROSION - Category 1 SERIOUS EYE DAMAGE - Category 1

SARA 313

	Chemical name	CAS number	Concentration
Supplier notification :	butan-1-ol	71-36-3	5 - 10

SARA 313 notifications must not be detached from the SDS and any copying and redistribution of the SDS shall include copying and redistribution of the notice attached to copies of the SDS subsequently redistributed.

Additional environmental information is contained on the Environmental Data Sheet for this product, which can be obtained from your PPG representative.

California Prop. 65

⚠ **WARNING**: Cancer - www.P65Warnings.ca.gov.

Section 16. Other information

Hazardous Material Information System (U.S.A.)

Health : 3 * **Flammability** : 3 **Physical hazards** : 0
(*) - Chronic effects

Caution: HMIS® ratings are based on a 0-4 rating scale, with 0 representing minimal hazards or risks, and 4 representing significant hazards or risks. Although HMIS® ratings and the associated label are not required on MSDSs or products leaving a facility under 29 CFR 1910.1200, the preparer may choose to provide them. HMIS® ratings are to be used with a fully implemented HMIS® program. HMIS® is a registered trademark and service mark of the American Coatings Association, Inc.

The customer is responsible for determining the PPE code for this material. For more information on HMIS® Personal Protective Equipment (PPE) codes, consult the HMIS® Implementation Manual.

National Fire Protection Association (U.S.A.)

Health : 3 **Flammability** : 3 **Instability** : 0

Date of previous issue : **8/2/2020**

Organization that prepared the MSDS : EHS

Key to abbreviations : ATE = Acute Toxicity Estimate
BCF = Bioconcentration Factor
GHS = Globally Harmonized System of Classification and Labelling of Chemicals
IATA = International Air Transport Association
IBC = Intermediate Bulk Container
IMDG = International Maritime Dangerous Goods
LogPow = logarithm of the octanol/water partition coefficient
MARPOL = International Convention for the Prevention of Pollution From Ships, 1973 as modified by the Protocol of 1978. ("Marpol" = marine pollution)
N/A = Not available
SGG = Segregation Group
UN = United Nations

◤ **Indicates information that has changed from previously issued version.**

Disclaimer

The information contained in this data sheet is based on present scientific and technical knowledge. The purpose of this information is to draw attention to the health and safety aspects concerning the products supplied by PPG, and to recommend precautionary measures for the storage and handling of the products. No warranty or guarantee is given in respect of the properties of the products. No liability can be accepted for any failure to observe the precautionary measures described in this data sheet or for any misuse of the products.

SAFETY DATA SHEET

Date of issue/Date of revision **27 April 2021**
Version 22

Section 1. Identification

Product name	: A-CHROMATIC LV SEALER - BLACK
Product code	: ECS27
Other means of identification	: Not available.
Product type	: Liquid.

Relevant identified uses of the substance or mixture and uses advised against

Product use	: Industrial applications.
Use of the substance/ mixture	: Coating. Paints. Painting-related materials.
Uses advised against	: Not applicable.

Manufacturer	: PPG Industries, Inc. One PPG Place, Pittsburgh, PA 15272
Emergency telephone number	: (412) 434-4515 (U.S.) (514) 645-1320 (Canada) SETIQ Interior de la República: 800-00-214-00 (México) SETIQ Ciudad de México: (55) 5559-1588 (México)
Technical Phone Number	: 1-800-647-6050

Section 2. Hazards identification

OSHA/HCS status	: This material is considered hazardous by the OSHA Hazard Communication Standard (29 CFR 1910.1200).
Classification of the substance or mixture	: FLAMMABLE LIQUIDS - Category 3 SKIN IRRITATION - Category 2 EYE IRRITATION - Category 2A CARCINOGENICITY - Category 2 TOXIC TO REPRODUCTION - Category 1B SPECIFIC TARGET ORGAN TOXICITY (SINGLE EXPOSURE) (Respiratory tract irritation) - Category 3 Percentage of the mixture consisting of ingredient(s) of unknown acute toxicity: 14.9% (oral), 29% (dermal), 41.1% (inhalation)

Section 2. Hazards identification

This product contains TiO2 which has been classified as a GHS Carcinogen Category 2 based on its IARC 2B classification. For many PPG products, TiO2 is utilized as a raw material in a liquid coating formulation. In this case, the TiO2 particles are bound in a matrix with no meaningful potential for human exposure to unbound particles of TiO2 when the product is applied with a brush or roller. Sanding the coating surface or mist from spray applications may be harmful depending on the duration and level of exposure and require the use of appropriate personal protective equipment and/or engineering controls (see Section 8).

GHS label elements

Hazard pictograms :

Signal word : Danger

Hazard statements : Flammable liquid and vapor.
Causes skin irritation.
Causes serious eye irritation.
May cause respiratory irritation.
Suspected of causing cancer.
May damage fertility or the unborn child.

Precautionary statements

Prevention : Obtain special instructions before use. Do not handle until all safety precautions have been read and understood. Wear protective gloves, protective clothing and eye or face protection. Keep away from heat, hot surfaces, sparks, open flames and other ignition sources. No smoking. Use explosion-proof electrical, ventilating or lighting equipment. Use non-sparking tools. Take action to prevent static discharges. Use only outdoors or in a well-ventilated area. Avoid breathing vapor. Wash thoroughly after handling.

Response : IF exposed or concerned: Get medical advice or attention. IF INHALED: Remove person to fresh air and keep comfortable for breathing. Call a POISON CENTER or doctor if you feel unwell. IF ON SKIN (or hair): Take off immediately all contaminated clothing. Rinse skin with water. IF ON SKIN: Wash with plenty of water. If skin irritation occurs: Get medical advice or attention. IF IN EYES: Rinse cautiously with water for several minutes. Remove contact lenses, if present and easy to do. Continue rinsing. If eye irritation persists: Get medical advice or attention.

Storage : Store locked up. Store in a well-ventilated place. Keep container tightly closed. Keep cool.

Disposal : Dispose of contents and container in accordance with all local, regional, national and international regulations.

Supplemental label elements : Sanding and grinding dusts may be harmful if inhaled. Repeated exposure to high vapor concentrations may cause irritation of the respiratory system and permanent brain and nervous system damage. Inhalation of vapor/aerosol concentrations above the recommended exposure limits causes headaches, drowsiness and nausea and may lead to unconsciousness or death. Avoid contact with skin and clothing. Wash thoroughly after handling. Emits toxic fumes when heated.

Hazards not otherwise classified : Prolonged or repeated contact may dry skin and cause irritation.

Section 3. Composition/information on ingredients

Substance/mixture : Mixture
Product name : A-CHROMATIC LV SEALER - BLACK

Ingredient name	%	CAS number
4-chloro-α,α,α-trifluorotoluene	≥20 - ≤50	98-56-6
barium sulfate	≥10 - ≤20	7727-43-7
Talc , not containing asbestiform fibres	≥5.0 - ≤10	14807-96-6
Kaolin	≥1.0 - ≤5.0	1332-58-7
2-methoxy-1-methylethyl acetate	≥1.0 - ≤5.0	108-65-6
n-butyl acetate	≥1.0 - ≤5.0	123-86-4
acetone	≥1.0 - ≤4.9	67-64-1
titanium dioxide	≥1.0 - ≤5.0	13463-67-7
xylene	≤1.9	1330-20-7
pentyl propionate	≥1.0 - ≤5.0	624-54-4
benzyl butyl phthalate	≥1.0 - ≤5.0	85-68-7
carbon black	≤1.0	1333-86-4
ethylbenzene	<1.0	100-41-4

SUB codes represent substances without registered CAS Numbers.

Any concentration shown as a range is to protect confidentiality or is due to batch variation.

There are no additional ingredients present which, within the current knowledge of the supplier and in the concentrations applicable, are classified as hazardous to health or the environment and hence require reporting in this section.

Occupational exposure limits, if available, are listed in Section 8.

Section 4. First aid measures

If ingestion, irritation, any type of overexposure or symptoms of overexposure occur during or persists after use of this product, contact a POISON CONTROL CENTER, EMERGENCY ROOM OR PHYSICIAN immediately; have Safety Data Sheet information available. Never give anything by mouth to an unconscious or convulsing person.

Description of necessary first aid measures

Eye contact : Remove contact lenses, irrigate copiously with clean, fresh water, holding the eyelids apart for at least 10 minutes and seek immediate medical advice.

Inhalation : Remove to fresh air. Keep person warm and at rest. If not breathing, if breathing is irregular or if respiratory arrest occurs, provide artificial respiration or oxygen by trained personnel.

Skin contact : Remove contaminated clothing and shoes. Wash skin thoroughly with soap and water or use recognized skin cleanser. Do NOT use solvents or thinners.

Ingestion : If swallowed, seek medical advice immediately and show this container or label. Keep person warm and at rest. Do NOT induce vomiting.

Most important symptoms/effects, acute and delayed

Potential acute health effects

Eye contact : Causes serious eye irritation.

Inhalation : May cause respiratory irritation.

Skin contact : Causes skin irritation. Defatting to the skin.

Ingestion : No known significant effects or critical hazards.

Over-exposure signs/symptoms

Section 4. First aid measures

Eye contact : Adverse symptoms may include the following:
pain or irritation
watering
redness

Inhalation : Adverse symptoms may include the following:
respiratory tract irritation
coughing
reduced fetal weight
increase in fetal deaths
skeletal malformations

Skin contact : Adverse symptoms may include the following:
irritation
redness
dryness
cracking
reduced fetal weight
increase in fetal deaths
skeletal malformations

Ingestion : Adverse symptoms may include the following:
reduced fetal weight
increase in fetal deaths
skeletal malformations

Indication of immediate medical attention and special treatment needed, if necessary

Notes to physician : In case of inhalation of decomposition products in a fire, symptoms may be delayed. The exposed person may need to be kept under medical surveillance for 48 hours.

Specific treatments : No specific treatment.

Protection of first-aiders : No action shall be taken involving any personal risk or without suitable training. If it is suspected that fumes are still present, the rescuer should wear an appropriate mask or self-contained breathing apparatus. It may be dangerous to the person providing aid to give mouth-to-mouth resuscitation. Wash contaminated clothing thoroughly with water before removing it, or wear gloves.

See toxicological information (Section 11)

Section 5. Fire-fighting measures

Extinguishing media

Suitable extinguishing media : Use dry chemical, CO_2, water spray (fog) or foam.

Unsuitable extinguishing media : Do not use water jet.

Specific hazards arising from the chemical : Flammable liquid and vapor. In a fire or if heated, a pressure increase will occur and the container may burst, with the risk of a subsequent explosion. Runoff to sewer may create fire or explosion hazard.

Section 5. Fire-fighting measures

Hazardous thermal decomposition products : Decomposition products may include the following materials:
carbon oxides
sulfur oxides
halogenated compounds
carbonyl halides
metal oxide/oxides

Special protective actions for fire-fighters : Promptly isolate the scene by removing all persons from the vicinity of the incident if there is a fire. No action shall be taken involving any personal risk or without suitable training. Move containers from fire area if this can be done without risk. Use water spray to keep fire-exposed containers cool.

Special protective equipment for fire-fighters : Fire-fighters should wear appropriate protective equipment and self-contained breathing apparatus (SCBA) with a full face-piece operated in positive pressure mode.

Section 6. Accidental release measures

Personal precautions, protective equipment and emergency procedures

For non-emergency personnel : No action shall be taken involving any personal risk or without suitable training. Evacuate surrounding areas. Keep unnecessary and unprotected personnel from entering. Do not touch or walk through spilled material. Shut off all ignition sources. No flares, smoking or flames in hazard area. Avoid breathing vapor or mist. Provide adequate ventilation. Wear appropriate respirator when ventilation is inadequate. Put on appropriate personal protective equipment.

For emergency responders : If specialized clothing is required to deal with the spillage, take note of any information in Section 8 on suitable and unsuitable materials. See also the information in "For non-emergency personnel".

Environmental precautions : Avoid dispersal of spilled material and runoff and contact with soil, waterways, drains and sewers. Inform the relevant authorities if the product has caused environmental pollution (sewers, waterways, soil or air).

Methods and materials for containment and cleaning up

Small spill : Stop leak if without risk. Move containers from spill area. Use spark-proof tools and explosion-proof equipment. Dilute with water and mop up if water-soluble. Alternatively, or if water-insoluble, absorb with an inert dry material and place in an appropriate waste disposal container. Dispose of via a licensed waste disposal contractor.

Large spill : Stop leak if without risk. Move containers from spill area. Use spark-proof tools and explosion-proof equipment. Approach release from upwind. Prevent entry into sewers, water courses, basements or confined areas. Wash spillages into an effluent treatment plant or proceed as follows. Contain and collect spillage with non-combustible, absorbent material e.g. sand, earth, vermiculite or diatomaceous earth and place in container for disposal according to local regulations (see Section 13). Dispose of via a licensed waste disposal contractor. Contaminated absorbent material may pose the same hazard as the spilled product. Note: see Section 1 for emergency contact information and Section 13 for waste disposal.

Section 7. Handling and storage

Precautions for safe handling

Protective measures : Put on appropriate personal protective equipment (see Section 8). Avoid exposure - obtain special instructions before use. Avoid exposure during pregnancy. Do not handle until all safety precautions have been read and understood. Do not get in eyes or on skin or clothing. Do not ingest. Avoid breathing vapor or mist. Use only with adequate ventilation. Wear appropriate respirator when ventilation is inadequate. Do not enter storage areas and confined spaces unless adequately ventilated. Keep in the original container or an approved alternative made from a compatible material, kept tightly closed when not in use. Store and use away from heat, sparks, open flame or any other ignition source. Use explosion-proof electrical (ventilating, lighting and material handling) equipment. Use only non-sparking tools. Take precautionary measures against electrostatic discharges. Empty containers retain product residue and can be hazardous. Do not reuse container.

Special precautions : If this material is part of a multiple component system, read the Safety Data Sheet(s) for the other component or components before blending as the resulting mixture may have the hazards of all of its parts.

Advice on general occupational hygiene : Eating, drinking and smoking should be prohibited in areas where this material is handled, stored and processed. Workers should wash hands and face before eating, drinking and smoking. Remove contaminated clothing and protective equipment before entering eating areas. See also Section 8 for additional information on hygiene measures.

Conditions for safe storage, including any incompatibilities : Do not store below the following temperature: 5°C (41°F). Store in accordance with local regulations. Store in a segregated and approved area. Store in original container protected from direct sunlight in a dry, cool and well-ventilated area, away from incompatible materials (see Section 10) and food and drink. Store locked up. Eliminate all ignition sources. Separate from oxidizing materials. Keep container tightly closed and sealed until ready for use. Containers that have been opened must be carefully resealed and kept upright to prevent leakage. Do not store in unlabeled containers. Use appropriate containment to avoid environmental contamination.

Section 8. Exposure controls/personal protection

Control parameters

Occupational exposure limits

Ingredient name	Exposure limits
4-chloro-α,α,α-trifluorotoluene	**IPEL (PPG).** TWA: 0.57 ppm STEL: 1.71 ppm
barium sulfate	**ACGIH TLV (United States, 3/2020).** TWA: 5 mg/m³ 8 hours. Form: Inhalable fraction **OSHA PEL (United States, 5/2018).** TWA: 5 mg/m³ 8 hours. Form: Respirable fraction TWA: 15 mg/m³ 8 hours. Form: Total dust
Talc , not containing asbestiform fibres	**ACGIH TLV (United States, 3/2020).** TWA: 2 mg/m³ 8 hours. Form: Respirable **OSHA PEL Z3 (United States).** TWA: 2 mg/m³

Section 8. Exposure controls/personal protection

Kaolin	**ACGIH TLV (United States, 3/2020).** TWA: 2 mg/m³ 8 hours. Form: Respirable fraction **OSHA PEL (United States, 5/2018).** TWA: 5 mg/m³ 8 hours. Form: Respirable fraction TWA: 15 mg/m³ 8 hours. Form: Total dust
2-methoxy-1-methylethyl acetate	**IPEL (PPG, 10/2017). Absorbed through skin.** TWA: 30 ppm STEL: 90 ppm
n-butyl acetate	**OSHA PEL (United States, 5/2018).** TWA: 710 mg/m³ 8 hours. TWA: 150 ppm 8 hours. **ACGIH TLV (United States, 3/2020).** STEL: 150 ppm 15 minutes. TWA: 50 ppm 8 hours.
acetone	**ACGIH TLV (United States, 3/2020).** STEL: 500 ppm 15 minutes. TWA: 250 ppm 8 hours. **OSHA PEL (United States, 5/2018).** TWA: 2400 mg/m³ 8 hours. TWA: 1000 ppm 8 hours.
titanium dioxide	**OSHA PEL (United States, 5/2018).** TWA: 15 mg/m³ 8 hours. Form: Total dust **ACGIH TLV (United States, 3/2020).** TWA: 10 mg/m³ 8 hours.
xylene	**ACGIH TLV (United States, 3/2020).** STEL: 651 mg/m³ 15 minutes. STEL: 150 ppm 15 minutes. TWA: 434 mg/m³ 8 hours. TWA: 100 ppm 8 hours. **OSHA PEL (United States, 5/2018).** TWA: 435 mg/m³ 8 hours. TWA: 100 ppm 8 hours.
pentyl propionate	None.
benzyl butyl phthalate	None.
carbon black	**ACGIH TLV (United States, 3/2020).** TWA: 3 mg/m³ 8 hours. Form: Inhalable fraction **OSHA PEL (United States, 5/2018).** TWA: 3.5 mg/m³ 8 hours.
ethylbenzene	**ACGIH TLV (United States, 3/2020).** TWA: 20 ppm 8 hours. **OSHA PEL (United States, 5/2018).** TWA: 435 mg/m³ 8 hours. TWA: 100 ppm 8 hours.

Key to abbreviations

A = Acceptable Maximum Peak
ACGIH = American Conference of Governmental Industrial Hygienists.
C = Ceiling Limit
F = Fume
S = Potential skin absorption
SR = Respiratory sensitization
SS = Skin sensitization
STEL = Short term Exposure limit values

Section 8. Exposure controls/personal protection

IPEL	= Internal Permissible Exposure Limit	TD	= Total dust
OSHA	= Occupational Safety and Health Administration.	TLV	= Threshold Limit Value
R	= Respirable	TWA	= Time Weighted Average
Z	= OSHA 29 CFR 1910.1200 Subpart Z - Toxic and Hazardous Substances		

Consult local authorities for acceptable exposure limits.

Recommended monitoring procedures : If this product contains ingredients with exposure limits, personal, workplace atmosphere or biological monitoring may be required to determine the effectiveness of the ventilation or other control measures and/or the necessity to use respiratory protective equipment. Reference should be made to appropriate monitoring standards. Reference to national guidance documents for methods for the determination of hazardous substances will also be required.

Appropriate engineering controls : Use only with adequate ventilation. Use process enclosures, local exhaust ventilation or other engineering controls to keep worker exposure to airborne contaminants below any recommended or statutory limits. The engineering controls also need to keep gas, vapor or dust concentrations below any lower explosive limits. Use explosion-proof ventilation equipment.

Environmental exposure controls : Emissions from ventilation or work process equipment should be checked to ensure they comply with the requirements of environmental protection legislation. In some cases, fume scrubbers, filters or engineering modifications to the process equipment will be necessary to reduce emissions to acceptable levels.

Individual protection measures

Hygiene measures : Wash hands, forearms and face thoroughly after handling chemical products, before eating, smoking and using the lavatory and at the end of the working period. Appropriate techniques should be used to remove potentially contaminated clothing. Wash contaminated clothing before reusing. Ensure that eyewash stations and safety showers are close to the workstation location.

Eye/face protection : Chemical splash goggles.

Skin protection

Hand protection : Chemical-resistant, impervious gloves complying with an approved standard should be worn at all times when handling chemical products if a risk assessment indicates this is necessary. Considering the parameters specified by the glove manufacturer, check during use that the gloves are still retaining their protective properties. It should be noted that the time to breakthrough for any glove material may be different for different glove manufacturers. In the case of mixtures, consisting of several substances, the protection time of the gloves cannot be accurately estimated.

Gloves : For prolonged or repeated handling, use the following type of gloves:

May be used: Chloroprene
Recommended: neoprene, natural rubber (latex), butyl rubber, polyvinyl alcohol (PVA), Viton®
Not recommended: nitrile rubber

Body protection : Personal protective equipment for the body should be selected based on the task being performed and the risks involved and should be approved by a specialist before handling this product. When there is a risk of ignition from static electricity, wear anti-static protective clothing. For the greatest protection from static discharges, clothing should include anti-static overalls, boots and gloves.

Section 8. Exposure controls/personal protection

Other skin protection : Appropriate footwear and any additional skin protection measures should be selected based on the task being performed and the risks involved and should be approved by a specialist before handling this product.

Respiratory protection : Respirator selection must be based on known or anticipated exposure levels, the hazards of the product and the safe working limits of the selected respirator. If workers are exposed to concentrations above the exposure limit, they must use appropriate, certified respirators. Use a properly fitted, air-purifying or air-fed respirator complying with an approved standard if a risk assessment indicates this is necessary.

Section 9. Physical and chemical properties

Appearance

Physical state : Liquid.

Color : Not available.

Odor : Not available.

Odor threshold : Not available.

pH : Not applicable.

Melting point : Not available.

Boiling point : >37.78°C (>100°F)

Flash point : Closed cup: 24.44°C (76°F)

Auto-ignition temperature : Not available.

Decomposition temperature : Not available.

Flammability (solid, gas) : Not available.

Lower and upper explosive (flammable) limits : Not available.

Evaporation rate : Not available.

Vapor pressure : Not available.

Vapor density : Not available.

Relative density : 1.48

Density (lbs / gal) : 12.35

Solubility : Insoluble in the following materials: cold water.

Partition coefficient: n-octanol/water : Not applicable.

Viscosity : Kinematic (40°C (104°F)): >0.21 cm^2/s (>21 cSt)

Volatility : 50% (v/v), 49.12% (w/w)

% Solid. (w/w) : 50.88

Section 10. Stability and reactivity

Reactivity : No specific test data related to reactivity available for this product or its ingredients.

Chemical stability : The product is stable.

Possibility of hazardous reactions : Under normal conditions of storage and use, hazardous reactions will not occur.

Section 10. Stability and reactivity

Conditions to avoid : When exposed to high temperatures may produce hazardous decomposition products. Refer to protective measures listed in sections 7 and 8.

Incompatible materials : Keep away from the following materials to prevent strong exothermic reactions: oxidizing agents, strong alkalis, strong acids.

Hazardous decomposition products : Depending on conditions, decomposition products may include the following materials: carbon oxides sulfur oxides halogenated compounds carbonyl halides metal oxide/ oxides

Section 11. Toxicological information

Information on toxicological effects

Acute toxicity

Product/ingredient name	Result	Species	Dose	Exposure
4-chloro-α,α,α-trifluorotoluene	LC50 Inhalation Vapor	Rat	33080 mg/m³	4 hours
	LD50 Dermal	Rabbit	>2.7 g/kg	-
	LD50 Oral	Rat	13 g/kg	-
barium sulfate	LD50 Dermal	Rat	>2000 mg/kg	-
	LD50 Oral	Rat	>5000 mg/kg	-
Kaolin	LC50 Inhalation Dusts and mists	Rat	>5.07 mg/l	4 hours
	LD50 Oral	Rat	>5000 mg/kg	-
2-methoxy-1-methylethyl acetate	LD50 Dermal	Rabbit	>5 g/kg	-
	LD50 Oral	Rat	6190 mg/kg	-
n-butyl acetate	LC50 Inhalation Vapor	Rat	>21.1 mg/l	4 hours
	LC50 Inhalation Vapor	Rat	2000 ppm	4 hours
	LD50 Dermal	Rabbit	>17600 mg/kg	-
	LD50 Oral	Rat	10.768 g/kg	-
acetone	LC50 Inhalation Vapor	Rat	76000 mg/m³	4 hours
	LD50 Dermal	Rabbit	15.8 g/kg	-
	LD50 Oral	Rat	5800 mg/kg	-
titanium dioxide	LC50 Inhalation Dusts and mists	Rat	>6.82 mg/l	4 hours
	LD50 Dermal	Rabbit	>5000 mg/kg	-
	LD50 Oral	Rat	>5000 mg/kg	-
xylene	LD50 Dermal	Rabbit	1.7 g/kg	-
	LD50 Oral	Rat	4.3 g/kg	-
pentyl propionate	LC50 Inhalation Dusts and mists	Rat	10.07 mg/l	4 hours
	LD50 Dermal	Rabbit	>14 g/kg	-
	LD50 Oral	Rat	>14 g/kg	-
benzyl butyl phthalate	LC50 Inhalation Vapor	Rat	>6700 mg/m³	4 hours
	LD50 Dermal	Rabbit	>10 g/kg	-
	LD50 Dermal	Rat	6700 mg/kg	-
	LD50 Oral	Rat	2.33 g/kg	-
carbon black	LD50 Oral	Rat	>10 g/kg	-
ethylbenzene	LC50 Inhalation Vapor	Rat	17.8 mg/l	4 hours
	LD50 Dermal	Rabbit	17.8 g/kg	-
	LD50 Oral	Rat	3.5 g/kg	-

Conclusion/Summary : There are no data available on the mixture itself.

Section 11. Toxicological information

Irritation/Corrosion

Product/ingredient name	Result	Species	Score	Exposure	Observation
xylene	Skin - Moderate irritant	Rabbit	-	24 hours 500 mg	-

Conclusion/Summary

Skin : There are no data available on the mixture itself.
Eyes : There are no data available on the mixture itself.
Respiratory : There are no data available on the mixture itself.

Sensitization

Conclusion/Summary

Skin : There are no data available on the mixture itself.
Respiratory : There are no data available on the mixture itself.

Mutagenicity

Conclusion/Summary : There are no data available on the mixture itself.

Carcinogenicity

Conclusion/Summary : There are no data available on the mixture itself.

Classification

Product/ingredient name	OSHA	IARC	NTP
4-chloro-α,α,α-trifluorotoluene	-	2B	-
titanium dioxide	-	2B	-
xylene	-	3	-
benzyl butyl phthalate	-	3	-
carbon black	-	2B	-
ethylbenzene	-	2B	-

Carcinogen Classification code:

IARC: 1, 2A, 2B, 3, 4
NTP: Known to be a human carcinogen; Reasonably anticipated to be a human carcinogen
OSHA: +
Not listed/not regulated: -

Reproductive toxicity

Conclusion/Summary : There are no data available on the mixture itself.

Teratogenicity

Conclusion/Summary : There are no data available on the mixture itself.

Specific target organ toxicity (single exposure)

Name	Category	Route of exposure	Target organs
4-chloro-α,α,α-trifluorotoluene	Category 3	-	Respiratory tract irritation
Talc , not containing asbestiform fibres	Category 3	-	Respiratory tract irritation
2-methoxy-1-methylethyl acetate	Category 3	-	Narcotic effects
n-butyl acetate	Category 3	-	Narcotic effects
acetone	Category 3	-	Narcotic effects
xylene	Category 3	-	Respiratory tract irritation

Section 11. Toxicological information

Specific target organ toxicity (repeated exposure)

Name	Category	Route of exposure	Target organs
ethylbenzene	Category 2	-	hearing organs

Target organs : Contains material which causes damage to the following organs: brain, central nervous system (CNS).
Contains material which may cause damage to the following organs: kidneys, lungs, the nervous system, liver, gastrointestinal tract, cardiovascular system, upper respiratory tract, skin, adrenal, eye, lens or cornea, stomach, testes.

Aspiration hazard

Name	Result
xylene	ASPIRATION HAZARD - Category 1
ethylbenzene	ASPIRATION HAZARD - Category 1

Information on the likely routes of exposure

Potential acute health effects

Eye contact : Causes serious eye irritation.
Inhalation : May cause respiratory irritation.
Skin contact : Causes skin irritation. Defatting to the skin.
Ingestion : No known significant effects or critical hazards.

Over-exposure signs/symptoms

Eye contact : Adverse symptoms may include the following:
pain or irritation
watering
redness

Inhalation : Adverse symptoms may include the following:
respiratory tract irritation
coughing
reduced fetal weight
increase in fetal deaths
skeletal malformations

Skin contact : Adverse symptoms may include the following:
irritation
redness
dryness
cracking
reduced fetal weight
increase in fetal deaths
skeletal malformations

Ingestion : Adverse symptoms may include the following:
reduced fetal weight
increase in fetal deaths
skeletal malformations

Delayed and immediate effects and also chronic effects from short and long term exposure

Section 11. Toxicological information

Conclusion/Summary : There are no data available on the mixture itself. This product contains TiO2 which has been classified as a GHS Carcinogen Category 2 based on its IARC 2B classification. For many PPG products, TiO2 is utilized as a raw material in a liquid coating formulation. In this case, the TiO2 particles are bound in a matrix with no meaningful potential for human exposure to unbound particles of TiO2 when the product is applied with a brush or roller. Sanding the coating surface or mist from spray applications may be harmful depending on the duration and level of exposure and require the use of appropriate personal protective equipment and/or engineering controls (see Section 8). Exposure to component solvent vapor concentrations in excess of the stated occupational exposure limit may result in adverse health effects such as mucous membrane and respiratory system irritation and adverse effects on the kidneys, liver and central nervous system. Symptoms and signs include headache, dizziness, fatigue, muscular weakness, drowsiness and, in extreme cases, loss of consciousness. Solvents may cause some of the above effects by absorption through the skin. There is some evidence that repeated exposure to organic solvent vapors in combination with constant loud noise can cause greater hearing loss than expected from exposure to noise alone. If splashed in the eyes, the liquid may cause irritation and reversible damage. Ingestion may cause nausea, diarrhea and vomiting. This takes into account, where known, delayed and immediate effects and also chronic effects of components from short-term and long-term exposure by oral, inhalation and dermal routes of exposure and eye contact.

Short term exposure

Potential immediate effects : There are no data available on the mixture itself.

Potential delayed effects : There are no data available on the mixture itself.

Long term exposure

Potential immediate effects : There are no data available on the mixture itself.

Potential delayed effects : There are no data available on the mixture itself.

Potential chronic health effects

General : Prolonged or repeated contact can defat the skin and lead to irritation, cracking and/or dermatitis.

Carcinogenicity : Suspected of causing cancer. Risk of cancer depends on duration and level of exposure.

Mutagenicity : No known significant effects or critical hazards.

Reproductive toxicity : May damage fertility or the unborn child.

Numerical measures of toxicity

Acute toxicity estimates

Product/ingredient name	Oral (mg/kg)	Dermal (mg/kg)	Inhalation (gases) (ppm)	Inhalation (vapors) (mg/l)	Inhalation (dusts and mists) (mg/l)

Section 11. Toxicological information

A-CHROMATIC LV SEALER - BLACK	119461.6	3343.5	N/A	130.8	77.5
4-chloro-α,α,α-trifluorotoluene	13000	2500	N/A	33.08	N/A
barium sulfate	N/A	2500	N/A	N/A	N/A
2-methoxy-1-methylethyl acetate	6190	N/A	N/A	N/A	N/A
n-butyl acetate	10768	N/A	N/A	N/A	N/A
acetone	5800	15800	N/A	76	N/A
xylene	4300	1700	N/A	11	1.5
pentyl propionate	N/A	N/A	N/A	N/A	10.07
benzyl butyl phthalate	2330	6700	N/A	3	N/A
ethylbenzene	3500	17800	N/A	17.8	1.5

Section 12. Ecological information

Toxicity

Product/ingredient name	Result	Species	Exposure
2-methoxy-1-methylethyl acetate	Acute LC50 134 mg/l Fresh water	Fish - Oncorhynchus mykiss	96 hours
n-butyl acetate	Acute LC50 18 mg/l	Fish	96 hours
acetone	Acute LC50 4.42589 ml/L Marine water	Crustaceans - Acartia tonsa - Copepodid	48 hours
	Acute LC50 5540 mg/l	Fish	96 hours
titanium dioxide	Acute LC50 >100 mg/l Fresh water	Daphnia - Daphnia magna	48 hours
pentyl propionate	Acute LC50 56 mg/l	Fish	96 hours
benzyl butyl phthalate	LC50 0.51 mg/l	Fish	96 hours
	Chronic EC10 0.57 mg/l Fresh water	Algae - Pseudokirchneriella subcapitata - Exponential growth phase	72 hours
ethylbenzene	Acute LC50 150 to 200 mg/l Fresh water	Fish	96 hours

Persistence and degradability

Product/ingredient name	Test	Result	Dose	Inoculum
2-methoxy-1-methylethyl acetate	-	83 % - Readily - 28 days	-	-
n-butyl acetate	TEPA and OECD 301D	83 % - Readily - 28 days	-	-
acetone	-	90.9 % - Readily - 28 days	-	-
pentyl propionate	OECD 301F	90.1 % - Readily - 28 days	-	-

Product/ingredient name	Aquatic half-life	Photolysis	Biodegradability
2-methoxy-1-methylethyl acetate	-	-	Readily
n-butyl acetate	-	-	Readily
acetone	-	-	Readily
xylene	-	-	Readily
pentyl propionate	-	-	Readily
ethylbenzene	-	-	Readily

Bioaccumulative potential

Section 12. Ecological information

Product/ingredient name	$LogP_{ow}$	BCF	Potential
2-methoxy-1-methylethyl acetate	0.56	-	low
n-butyl acetate	1.78	-	low
acetone	-0.24	3	low
xylene	3.16	7.4 to 18.5	low
benzyl butyl phthalate	4.73	16.22	low
ethylbenzene	3.15	79.43	low

Mobility in soil

Soil/water partition coefficient (K_{OC}) : Not available.

Section 13. Disposal considerations

Disposal methods : The generation of waste should be avoided or minimized wherever possible. Disposal of this product, solutions and any by-products should at all times comply with the requirements of environmental protection and waste disposal legislation and any regional local authority requirements. Dispose of surplus and non-recyclable products via a licensed waste disposal contractor. Waste should not be disposed of untreated to the sewer unless fully compliant with the requirements of all authorities with jurisdiction. Waste packaging should be recycled. Incineration or landfill should only be considered when recycling is not feasible. This material and its container must be disposed of in a safe way. Care should be taken when handling emptied containers that have not been cleaned or rinsed out. Empty containers or liners may retain some product residues. Vapor from product residues may create a highly flammable or explosive atmosphere inside the container. Do not cut, weld or grind used containers unless they have been cleaned thoroughly internally. Avoid dispersal of spilled material and runoff and contact with soil, waterways, drains and sewers.

Disposal should be in accordance with applicable regional, national and local laws and regulations.

Refer to Section 7: HANDLING AND STORAGE and Section 8: EXPOSURE CONTROLS/PERSONAL PROTECTION for additional handling information and protection of employees. Section 6. Accidental release measures

14. Transport information

	DOT	IMDG	IATA
UN number	UN1263	UN1263	UN1263
UN proper shipping name	PAINT	PAINT	PAINT
Transport hazard class (es)	3	3	3
Packing group	III	III	III
Environmental hazards	No.	No.	No.
Marine pollutant substances	Not applicable.	Not applicable.	Not applicable.

14. Transport information

Product RQ (lbs)	8765.7	Not applicable.	Not applicable.
RQ substances	(xylene, benzyl butyl phthalate)	Not applicable.	Not applicable.

Additional information

DOT : Package sizes shipped in quantities less than the product reportable quantity are not subject to the RQ (reportable quantity) transportation requirements.

IMDG : None identified.

IATA : None identified.

Special precautions for user : **Transport within user's premises:** always transport in closed containers that are upright and secure. Ensure that persons transporting the product know what to do in the event of an accident or spillage.

Transport in bulk according to IMO instruments : Not applicable.

Section 15. Regulatory information

United States

United States inventory (TSCA 8b) : All components are active or exempted.

U.S. Federal regulations :

United States - TSCA 5(a)2 - Final significant new use rules:

-chloro-α,α,α-trifluorotoluene Listed 40 CFR 799.5089

SARA 302/304

SARA 304 RQ : Not applicable.

Composition/information on ingredients

No products were found.

SARA 311/312

Classification : FLAMMABLE LIQUIDS - Category 3
SKIN IRRITATION - Category 2
EYE IRRITATION - Category 2A
CARCINOGENICITY - Category 2
TOXIC TO REPRODUCTION - Category 1B
SPECIFIC TARGET ORGAN TOXICITY (SINGLE EXPOSURE) (Respiratory tract irritation) - Category 3
HNOC - Defatting irritant

Composition/information on ingredients

Section 15. Regulatory information

Name	%	Classification
[redacted]-chloro-α,α,α-trifluorotoluene	≥20 - ≤50	FLAMMABLE LIQUIDS - Category 3 SKIN IRRITATION - Category 2 EYE IRRITATION - Category 2A CARCINOGENICITY - Category 2 SPECIFIC TARGET ORGAN TOXICITY (SINGLE EXPOSURE) (Respiratory tract irritation) - Category 3 HNOC - Defatting irritant
Talc , not containing asbestiform fibres	≥5.0 - ≤10	SPECIFIC TARGET ORGAN TOXICITY (SINGLE EXPOSURE) (Respiratory tract irritation) - Category 3
2-methoxy-1-methylethyl acetate	≥1.0 - ≤5.0	FLAMMABLE LIQUIDS - Category 3 SPECIFIC TARGET ORGAN TOXICITY (SINGLE EXPOSURE) (Narcotic effects) - Category 3
n-butyl acetate	≥1.0 - ≤5.0	FLAMMABLE LIQUIDS - Category 2 SPECIFIC TARGET ORGAN TOXICITY (SINGLE EXPOSURE) (Narcotic effects) - Category 3 HNOC - Defatting irritant
acetone	≥1.0 - ≤4.9	FLAMMABLE LIQUIDS - Category 2 EYE IRRITATION - Category 2A SPECIFIC TARGET ORGAN TOXICITY (SINGLE EXPOSURE) (Narcotic effects) - Category 3 HNOC - Defatting irritant
titanium dioxide	≥1.0 - ≤5.0	CARCINOGENICITY - Category 2
xylene	≤1.9	FLAMMABLE LIQUIDS - Category 3 ACUTE TOXICITY (dermal) - Category 4 ACUTE TOXICITY (inhalation) - Category 4 SKIN IRRITATION - Category 2 EYE IRRITATION - Category 2A SPECIFIC TARGET ORGAN TOXICITY (SINGLE EXPOSURE) (Respiratory tract irritation) - Category 3 ASPIRATION HAZARD - Category 1
pentyl propionate	≥1.0 - ≤5.0	FLAMMABLE LIQUIDS - Category 3 HNOC - Defatting irritant
benzyl butyl phthalate	≥1.0 - ≤5.0	ACUTE TOXICITY (inhalation) - Category 3 TOXIC TO REPRODUCTION - Category 1B
carbon black	≤1.0	CARCINOGENICITY - Category 2
ethylbenzene	<1.0	FLAMMABLE LIQUIDS - Category 2 ACUTE TOXICITY (inhalation) - Category 4 CARCINOGENICITY - Category 2 SPECIFIC TARGET ORGAN TOXICITY (REPEATED EXPOSURE) - Category 2 ASPIRATION HAZARD - Category 1 HNOC - Defatting irritant

SARA 313

		Chemical name	CAS number	Concentration
Supplier notification	:	xylene	1330-20-7	0.5 - 1.5
		ethylbenzene	100-41-4	0.1 - 1

SARA 313 notifications must not be detached from the SDS and any copying and redistribution of the SDS shall include copying and redistribution of the notice attached to copies of the SDS subsequently redistributed.

Section 15. Regulatory information

Additional environmental information is contained on the Environmental Data Sheet for this product, which can be obtained from your PPG representative.

California Prop. 65

⚠ **WARNING**: Cancer and Reproductive Harm - www.P65Warnings.ca.gov.

Section 16. Other information

Hazardous Material Information System (U.S.A.)

Health : 2 * **Flammability** : 3 **Physical hazards** : 0

(*) - Chronic effects

Caution: HMIS® ratings are based on a 0-4 rating scale, with 0 representing minimal hazards or risks, and 4 representing significant hazards or risks. Although HMIS® ratings and the associated label are not required on MSDSs or products leaving a facility under 29 CFR 1910.1200, the preparer may choose to provide them. HMIS® ratings are to be used with a fully implemented HMIS® program. HMIS® is a registered trademark and service mark of the American Coatings Association, Inc.

The customer is responsible for determining the PPE code for this material. For more information on HMIS® Personal Protective Equipment (PPE) codes, consult the HMIS® Implementation Manual.

National Fire Protection Association (U.S.A.)

Health : 2 **Flammability** : 3 **Instability** : 0

Date of previous issue : **1/12/2021**

Organization that prepared the SDS : EHS

Key to abbreviations : ATE = Acute Toxicity Estimate
BCF = Bioconcentration Factor
GHS = Globally Harmonized System of Classification and Labelling of Chemicals
IATA = International Air Transport Association
IBC = Intermediate Bulk Container
IMDG = International Maritime Dangerous Goods
LogPow = logarithm of the octanol/water partition coefficient
MARPOL = International Convention for the Prevention of Pollution From Ships, 1973 as modified by the Protocol of 1978. ("Marpol" = marine pollution)
N/A = Not available
SGG = Segregation Group
UN = United Nations

◤ **Indicates information that has changed from previously issued version.**

Disclaimer

The information contained in this data sheet is based on present scientific and technical knowledge. The purpose of this information is to draw attention to the health and safety aspects concerning the products supplied by PPG, and to recommend precautionary measures for the storage and handling of the products. No warranty or guarantee is given in respect of the properties of the products. No liability can be accepted for any failure to observe the precautionary measures described in this data sheet or for any misuse of the products.

SAFETY DATA SHEET

Date of issue/Date of revision **21 April 2021**
Version 19

Section 1. Identification

Product name	: A-CHROMATIC LV SEALER - GRAY
Product code	: ECS25
Other means of identification	: Not available.
Product type	: Liquid.

Relevant identified uses of the substance or mixture and uses advised against

Product use	: Industrial applications.
Use of the substance/ mixture	: Coating. Paints. Painting-related materials.
Uses advised against	: Not applicable.

Manufacturer	: PPG Industries, Inc. One PPG Place, Pittsburgh, PA 15272
Emergency telephone number	: (412) 434-4515 (U.S.) (514) 645-1320 (Canada) SETIQ Interior de la República: 800-00-214-00 (México) SETIQ Ciudad de México: (55) 5559-1588 (México)
Technical Phone Number	: 1-800-647-6050

Section 2. Hazards identification

OSHA/HCS status	: This material is considered hazardous by the OSHA Hazard Communication Standard (29 CFR 1910.1200).
Classification of the substance or mixture	: FLAMMABLE LIQUIDS - Category 2 SKIN IRRITATION - Category 2 EYE IRRITATION - Category 2A CARCINOGENICITY - Category 2 TOXIC TO REPRODUCTION - Category 1B SPECIFIC TARGET ORGAN TOXICITY (SINGLE EXPOSURE) (Respiratory tract irritation) - Category 3 Percentage of the mixture consisting of ingredient(s) of unknown acute toxicity: 14.9% (oral), 28.2% (dermal), 35.8% (inhalation)

Section 2. Hazards identification

This product contains TiO2 which has been classified as a GHS Carcinogen Category 2 based on its IARC 2B classification. For many PPG products, TiO2 is utilized as a raw material in a liquid coating formulation. In this case, the TiO2 particles are bound in a matrix with no meaningful potential for human exposure to unbound particles of TiO2 when the product is applied with a brush or roller. Sanding the coating surface or mist from spray applications may be harmful depending on the duration and level of exposure and require the use of appropriate personal protective equipment and/or engineering controls (see Section 8).

GHS label elements

Hazard pictograms :

Signal word : Danger

Hazard statements : Highly flammable liquid and vapor.
Causes skin irritation.
Causes serious eye irritation.
May cause respiratory irritation.
Suspected of causing cancer.
May damage fertility or the unborn child.

Precautionary statements

Prevention : Obtain special instructions before use. Do not handle until all safety precautions have been read and understood. Wear protective gloves, protective clothing and eye or face protection. Keep away from heat, hot surfaces, sparks, open flames and other ignition sources. No smoking. Use explosion-proof electrical, ventilating or lighting equipment. Use non-sparking tools. Take action to prevent static discharges. Use only outdoors or in a well-ventilated area. Avoid breathing vapor. Wash thoroughly after handling.

Response : IF exposed or concerned: Get medical advice or attention. IF INHALED: Remove person to fresh air and keep comfortable for breathing. Call a POISON CENTER or doctor if you feel unwell. IF ON SKIN (or hair): Take off immediately all contaminated clothing. Rinse skin with water. IF ON SKIN: Wash with plenty of water. If skin irritation occurs: Get medical advice or attention. IF IN EYES: Rinse cautiously with water for several minutes. Remove contact lenses, if present and easy to do. Continue rinsing. If eye irritation persists: Get medical advice or attention.

Storage : Store locked up. Store in a well-ventilated place. Keep container tightly closed. Keep cool.

Disposal : Dispose of contents and container in accordance with all local, regional, national and international regulations.

Supplemental label elements : Sanding and grinding dusts may be harmful if inhaled. Repeated exposure to high vapor concentrations may cause irritation of the respiratory system and permanent brain and nervous system damage. Inhalation of vapor/aerosol concentrations above the recommended exposure limits causes headaches, drowsiness and nausea and may lead to unconsciousness or death. Avoid contact with skin and clothing. Wash thoroughly after handling. Emits toxic fumes when heated.

Hazards not otherwise classified : Prolonged or repeated contact may dry skin and cause irritation.

Section 3. Composition/information on ingredients

Substance/mixture : Mixture
Product name : A-CHROMATIC LV SEALER - GRAY

Ingredient name	%	CAS number
4-chloro-α,α,α-trifluorotoluene	≥20 - ≤50	98-56-6
Talc , not containing asbestiform fibres	≥5.0 - ≤10	14807-96-6
titanium dioxide	≥5.0 - ≤10	13463-67-7
barium sulfate	≥5.0 - ≤10	7727-43-7
Kaolin	≥1.0 - ≤5.0	1332-58-7
2-methoxy-1-methylethyl acetate	≥1.0 - ≤5.0	108-65-6
n-butyl acetate	≥1.0 - ≤5.0	123-86-4
acetone	≥1.0 - ≤4.9	67-64-1
benzyl butyl phthalate	≥1.0 - ≤5.0	85-68-7
4-methylpentan-2-one	<1.0	108-10-1
ethylbenzene	<1.0	100-41-4
carbon black, respirable powder	≤1.0	1333-86-4

SUB codes represent substances without registered CAS Numbers.

Any concentration shown as a range is to protect confidentiality or is due to batch variation.

There are no additional ingredients present which, within the current knowledge of the supplier and in the concentrations applicable, are classified as hazardous to health or the environment and hence require reporting in this section.

Occupational exposure limits, if available, are listed in Section 8.

Section 4. First aid measures

If ingestion, irritation, any type of overexposure or symptoms of overexposure occur during or persists after use of this product, contact a POISON CONTROL CENTER, EMERGENCY ROOM OR PHYSICIAN immediately; have Safety Data Sheet information available. Never give anything by mouth to an unconscious or convulsing person.

Description of necessary first aid measures

Eye contact : Remove contact lenses, irrigate copiously with clean, fresh water, holding the eyelids apart for at least 10 minutes and seek immediate medical advice.

Inhalation : Remove to fresh air. Keep person warm and at rest. If not breathing, if breathing is irregular or if respiratory arrest occurs, provide artificial respiration or oxygen by trained personnel.

Skin contact : Remove contaminated clothing and shoes. Wash skin thoroughly with soap and water or use recognized skin cleanser. Do NOT use solvents or thinners.

Ingestion : If swallowed, seek medical advice immediately and show this container or label. Keep person warm and at rest. Do NOT induce vomiting.

Most important symptoms/effects, acute and delayed

Potential acute health effects

Eye contact : Causes serious eye irritation.

Inhalation : May cause respiratory irritation.

Skin contact : Causes skin irritation. Defatting to the skin.

Ingestion : No known significant effects or critical hazards.

Over-exposure signs/symptoms

Section 4. First aid measures

Eye contact : Adverse symptoms may include the following:
pain or irritation
watering
redness

Inhalation : Adverse symptoms may include the following:
respiratory tract irritation
coughing
reduced fetal weight
increase in fetal deaths
skeletal malformations

Skin contact : Adverse symptoms may include the following:
irritation
redness
dryness
cracking
reduced fetal weight
increase in fetal deaths
skeletal malformations

Ingestion : Adverse symptoms may include the following:
reduced fetal weight
increase in fetal deaths
skeletal malformations

Indication of immediate medical attention and special treatment needed, if necessary

Notes to physician : In case of inhalation of decomposition products in a fire, symptoms may be delayed. The exposed person may need to be kept under medical surveillance for 48 hours.

Specific treatments : No specific treatment.

Protection of first-aiders : No action shall be taken involving any personal risk or without suitable training. If it is suspected that fumes are still present, the rescuer should wear an appropriate mask or self-contained breathing apparatus. It may be dangerous to the person providing aid to give mouth-to-mouth resuscitation. Wash contaminated clothing thoroughly with water before removing it, or wear gloves.

See toxicological information (Section 11)

Section 5. Fire-fighting measures

Extinguishing media

Suitable extinguishing media : Use dry chemical, CO_2, water spray (fog) or foam.

Unsuitable extinguishing media : Do not use water jet.

Specific hazards arising from the chemical : Highly flammable liquid and vapor. In a fire or if heated, a pressure increase will occur and the container may burst, with the risk of a subsequent explosion. Runoff to sewer may create fire or explosion hazard.

Section 5. Fire-fighting measures

Hazardous thermal decomposition products : Decomposition products may include the following materials:
carbon oxides
sulfur oxides
halogenated compounds
carbonyl halides
metal oxide/oxides

Special protective actions for fire-fighters : Promptly isolate the scene by removing all persons from the vicinity of the incident if there is a fire. No action shall be taken involving any personal risk or without suitable training. Move containers from fire area if this can be done without risk. Use water spray to keep fire-exposed containers cool.

Special protective equipment for fire-fighters : Fire-fighters should wear appropriate protective equipment and self-contained breathing apparatus (SCBA) with a full face-piece operated in positive pressure mode.

Section 6. Accidental release measures

Personal precautions, protective equipment and emergency procedures

For non-emergency personnel : No action shall be taken involving any personal risk or without suitable training. Evacuate surrounding areas. Keep unnecessary and unprotected personnel from entering. Do not touch or walk through spilled material. Shut off all ignition sources. No flares, smoking or flames in hazard area. Avoid breathing vapor or mist. Provide adequate ventilation. Wear appropriate respirator when ventilation is inadequate. Put on appropriate personal protective equipment.

For emergency responders : If specialized clothing is required to deal with the spillage, take note of any information in Section 8 on suitable and unsuitable materials. See also the information in "For non-emergency personnel".

Environmental precautions : Avoid dispersal of spilled material and runoff and contact with soil, waterways, drains and sewers. Inform the relevant authorities if the product has caused environmental pollution (sewers, waterways, soil or air).

Methods and materials for containment and cleaning up

Small spill : Stop leak if without risk. Move containers from spill area. Use spark-proof tools and explosion-proof equipment. Dilute with water and mop up if water-soluble. Alternatively, or if water-insoluble, absorb with an inert dry material and place in an appropriate waste disposal container. Dispose of via a licensed waste disposal contractor.

Large spill : Stop leak if without risk. Move containers from spill area. Use spark-proof tools and explosion-proof equipment. Approach release from upwind. Prevent entry into sewers, water courses, basements or confined areas. Wash spillages into an effluent treatment plant or proceed as follows. Contain and collect spillage with non-combustible, absorbent material e.g. sand, earth, vermiculite or diatomaceous earth and place in container for disposal according to local regulations (see Section 13). Dispose of via a licensed waste disposal contractor. Contaminated absorbent material may pose the same hazard as the spilled product. Note: see Section 1 for emergency contact information and Section 13 for waste disposal.

Section 7. Handling and storage

Precautions for safe handling

Protective measures : Put on appropriate personal protective equipment (see Section 8). Avoid exposure - obtain special instructions before use. Avoid exposure during pregnancy. Do not handle until all safety precautions have been read and understood. Do not get in eyes or on skin or clothing. Do not ingest. Avoid breathing vapor or mist. Use only with adequate ventilation. Wear appropriate respirator when ventilation is inadequate. Do not enter storage areas and confined spaces unless adequately ventilated. Keep in the original container or an approved alternative made from a compatible material, kept tightly closed when not in use. Store and use away from heat, sparks, open flame or any other ignition source. Use explosion-proof electrical (ventilating, lighting and material handling) equipment. Use only non-sparking tools. Take precautionary measures against electrostatic discharges. Empty containers retain product residue and can be hazardous. Do not reuse container.

Special precautions : If this material is part of a multiple component system, read the Safety Data Sheet(s) for the other component or components before blending as the resulting mixture may have the hazards of all of its parts.

Advice on general occupational hygiene : Eating, drinking and smoking should be prohibited in areas where this material is handled, stored and processed. Workers should wash hands and face before eating, drinking and smoking. Remove contaminated clothing and protective equipment before entering eating areas. See also Section 8 for additional information on hygiene measures.

Conditions for safe storage, including any incompatibilities : Do not store below the following temperature: 5°C (41°F). Store in accordance with local regulations. Store in a segregated and approved area. Store in original container protected from direct sunlight in a dry, cool and well-ventilated area, away from incompatible materials (see Section 10) and food and drink. Store locked up. Eliminate all ignition sources. Separate from oxidizing materials. Keep container tightly closed and sealed until ready for use. Containers that have been opened must be carefully resealed and kept upright to prevent leakage. Do not store in unlabeled containers. Use appropriate containment to avoid environmental contamination.

Section 8. Exposure controls/personal protection

Control parameters

Occupational exposure limits

Ingredient name	Exposure limits
4-chloro-α,α,α-trifluorotoluene	**IPEL (PPG).** TWA: 0.57 ppm STEL: 1.71 ppm
Talc , not containing asbestiform fibres	**ACGIH TLV (United States, 3/2020).** TWA: 2 mg/m³ 8 hours. Form: Respirable **OSHA PEL Z3 (United States).** TWA: 2 mg/m³
titanium dioxide	**OSHA PEL (United States, 5/2018).** TWA: 15 mg/m³ 8 hours. Form: Total dust **ACGIH TLV (United States, 3/2020).** TWA: 10 mg/m³ 8 hours.
barium sulfate	**ACGIH TLV (United States, 3/2020).** TWA: 5 mg/m³ 8 hours. Form: Inhalable fraction

Section 8. Exposure controls/personal protection

Kaolin	**OSHA PEL (United States, 5/2018).** TWA: 5 mg/m³ 8 hours. Form: Respirable fraction TWA: 15 mg/m³ 8 hours. Form: Total dust **ACGIH TLV (United States, 3/2020).** TWA: 2 mg/m³ 8 hours. Form: Respirable fraction **OSHA PEL (United States, 5/2018).** TWA: 5 mg/m³ 8 hours. Form: Respirable fraction TWA: 15 mg/m³ 8 hours. Form: Total dust
2-methoxy-1-methylethyl acetate	**IPEL (PPG, 10/2017). Absorbed through skin.** TWA: 30 ppm STEL: 90 ppm
n-butyl acetate	**OSHA PEL (United States, 5/2018).** TWA: 710 mg/m³ 8 hours. TWA: 150 ppm 8 hours. **ACGIH TLV (United States, 3/2020).** STEL: 150 ppm 15 minutes. TWA: 50 ppm 8 hours.
acetone	**ACGIH TLV (United States, 3/2020).** STEL: 500 ppm 15 minutes. TWA: 250 ppm 8 hours. **OSHA PEL (United States, 5/2018).** TWA: 2400 mg/m³ 8 hours. TWA: 1000 ppm 8 hours.
benzyl butyl phthalate	None.
4-methylpentan-2-one	**ACGIH TLV (United States, 3/2020).** STEL: 75 ppm 15 minutes. TWA: 20 ppm 8 hours. **OSHA PEL (United States, 5/2018).** TWA: 410 mg/m³ 8 hours. TWA: 100 ppm 8 hours.
ethylbenzene	**ACGIH TLV (United States, 3/2020).** TWA: 20 ppm 8 hours. **OSHA PEL (United States, 5/2018).** TWA: 435 mg/m³ 8 hours. TWA: 100 ppm 8 hours.
carbon black, respirable powder	**ACGIH TLV (United States, 3/2020).** TWA: 3 mg/m³ 8 hours. Form: Inhalable fraction **OSHA PEL (United States, 5/2018).** TWA: 3.5 mg/m³ 8 hours.

Key to abbreviations

A = Acceptable Maximum Peak
ACGIH = American Conference of Governmental Industrial Hygienists.
C = Ceiling Limit
F = Fume
IPEL = Internal Permissible Exposure Limit
OSHA = Occupational Safety and Health Administration.
R = Respirable
Z = OSHA 29 CFR 1910.1200 Subpart Z - Toxic and Hazardous Substances
S = Potential skin absorption
SR = Respiratory sensitization
SS = Skin sensitization
STEL = Short term Exposure limit values
TD = Total dust
TLV = Threshold Limit Value
TWA = Time Weighted Average

Section 8. Exposure controls/personal protection

Consult local authorities for acceptable exposure limits.

Recommended monitoring procedures : If this product contains ingredients with exposure limits, personal, workplace atmosphere or biological monitoring may be required to determine the effectiveness of the ventilation or other control measures and/or the necessity to use respiratory protective equipment. Reference should be made to appropriate monitoring standards. Reference to national guidance documents for methods for the determination of hazardous substances will also be required.

Appropriate engineering controls : Use only with adequate ventilation. Use process enclosures, local exhaust ventilation or other engineering controls to keep worker exposure to airborne contaminants below any recommended or statutory limits. The engineering controls also need to keep gas, vapor or dust concentrations below any lower explosive limits. Use explosion-proof ventilation equipment.

Environmental exposure controls : Emissions from ventilation or work process equipment should be checked to ensure they comply with the requirements of environmental protection legislation. In some cases, fume scrubbers, filters or engineering modifications to the process equipment will be necessary to reduce emissions to acceptable levels.

Individual protection measures

Hygiene measures : Wash hands, forearms and face thoroughly after handling chemical products, before eating, smoking and using the lavatory and at the end of the working period. Appropriate techniques should be used to remove potentially contaminated clothing. Wash contaminated clothing before reusing. Ensure that eyewash stations and safety showers are close to the workstation location.

Eye/face protection : Chemical splash goggles.

Skin protection

Hand protection : Chemical-resistant, impervious gloves complying with an approved standard should be worn at all times when handling chemical products if a risk assessment indicates this is necessary. Considering the parameters specified by the glove manufacturer, check during use that the gloves are still retaining their protective properties. It should be noted that the time to breakthrough for any glove material may be different for different glove manufacturers. In the case of mixtures, consisting of several substances, the protection time of the gloves cannot be accurately estimated.

Gloves : For prolonged or repeated handling, use the following type of gloves:

Recommended: neoprene, natural rubber (latex), butyl rubber
May be used: nitrile rubber, Chloroprene

Body protection : Personal protective equipment for the body should be selected based on the task being performed and the risks involved and should be approved by a specialist before handling this product. When there is a risk of ignition from static electricity, wear anti-static protective clothing. For the greatest protection from static discharges, clothing should include anti-static overalls, boots and gloves.

Other skin protection : Appropriate footwear and any additional skin protection measures should be selected based on the task being performed and the risks involved and should be approved by a specialist before handling this product.

Section 8. Exposure controls/personal protection

Respiratory protection : Respirator selection must be based on known or anticipated exposure levels, the hazards of the product and the safe working limits of the selected respirator. If workers are exposed to concentrations above the exposure limit, they must use appropriate, certified respirators. Use a properly fitted, air-purifying or air-fed respirator complying with an approved standard if a risk assessment indicates this is necessary.

Section 9. Physical and chemical properties

Appearance

Physical state : Liquid.
Color : Not available.
Odor : Not available.
Odor threshold : Not available.
pH : Not applicable.
Melting point : Not available.
Boiling point : >37.78°C (>100°F)
Flash point : Closed cup: 22.22°C (72°F)
Auto-ignition temperature : Not available.
Decomposition temperature : Not available.
Flammability (solid, gas) : Not available.
Lower and upper explosive (flammable) limits : Not available.
Evaporation rate : Not available.
Vapor pressure : Not available.
Vapor density : Not available.
Relative density : 1.49
Density (lbs / gal) : 12.43
Bulk Density (g/cm³) : 1.49
Solubility : Insoluble in the following materials: cold water.
Partition coefficient: n-octanol/water : Not applicable.
Viscosity : Kinematic (40°C (104°F)): >0.21 cm^2/s (>21 cSt)
Volatility : 61% (v/v), 48.968% (w/w)
% Solid. (w/w) : 51.032

Section 10. Stability and reactivity

Reactivity : No specific test data related to reactivity available for this product or its ingredients.

Chemical stability : The product is stable.

Possibility of hazardous reactions : Under normal conditions of storage and use, hazardous reactions will not occur.

Conditions to avoid : When exposed to high temperatures may produce hazardous decomposition products.

Section 10. Stability and reactivity

Refer to protective measures listed in sections 7 and 8.

Incompatible materials : Keep away from the following materials to prevent strong exothermic reactions: oxidizing agents, strong alkalis, strong acids.

Hazardous decomposition products : Depending on conditions, decomposition products may include the following materials: carbon oxides sulfur oxides halogenated compounds carbonyl halides metal oxide/ oxides

Section 11. Toxicological information

Information on toxicological effects

Acute toxicity

Product/ingredient name	Result	Species	Dose	Exposure
4-chloro-α,α,α-trifluorotoluene	LC50 Inhalation Vapor	Rat	33080 mg/m³	4 hours
	LD50 Dermal	Rabbit	>2.7 g/kg	-
	LD50 Oral	Rat	13 g/kg	-
titanium dioxide	LC50 Inhalation Dusts and mists	Rat	>6.82 mg/l	4 hours
	LD50 Dermal	Rabbit	>5000 mg/kg	-
	LD50 Oral	Rat	>5000 mg/kg	-
barium sulfate	LD50 Dermal	Rat	>2000 mg/kg	-
	LD50 Oral	Rat	>5000 mg/kg	-
Kaolin	LC50 Inhalation Dusts and mists	Rat	>5.07 mg/l	4 hours
	LD50 Oral	Rat	>5000 mg/kg	-
2-methoxy-1-methylethyl acetate	LD50 Dermal	Rabbit	>5 g/kg	-
	LD50 Oral	Rat	6190 mg/kg	-
n-butyl acetate	LC50 Inhalation Vapor	Rat	>21.1 mg/l	4 hours
	LC50 Inhalation Vapor	Rat	2000 ppm	4 hours
	LD50 Dermal	Rabbit	>17600 mg/kg	-
	LD50 Oral	Rat	10.768 g/kg	-
acetone	LC50 Inhalation Vapor	Rat	76000 mg/m³	4 hours
	LD50 Dermal	Rabbit	15.8 g/kg	-
	LD50 Oral	Rat	5800 mg/kg	-
benzyl butyl phthalate	LC50 Inhalation Vapor	Rat	>6700 mg/m³	4 hours
	LD50 Dermal	Rabbit	>10 g/kg	-
	LD50 Dermal	Rat	6700 mg/kg	-
	LD50 Oral	Rat	2.33 g/kg	-
4-methylpentan-2-one	LC50 Inhalation Vapor	Rat	12.3 mg/l	4 hours
	LD50 Dermal	Rabbit	>5000 mg/kg	-
	LD50 Oral	Rat	2.08 g/kg	-
ethylbenzene	LC50 Inhalation Vapor	Rat	17.8 mg/l	4 hours
	LD50 Dermal	Rabbit	17.8 g/kg	-
	LD50 Oral	Rat	3.5 g/kg	-
carbon black, respirable powder	LD50 Oral	Rat	>10 g/kg	-

Conclusion/Summary : There are no data available on the mixture itself.

Irritation/Corrosion

Conclusion/Summary

Section 11. Toxicological information

Skin : There are no data available on the mixture itself.
Eyes : There are no data available on the mixture itself.
Respiratory : There are no data available on the mixture itself.

Sensitization

Conclusion/Summary

Skin : There are no data available on the mixture itself.
Respiratory : There are no data available on the mixture itself.

Mutagenicity

Conclusion/Summary : There are no data available on the mixture itself.

Carcinogenicity

Conclusion/Summary : There are no data available on the mixture itself.

Classification

Product/ingredient name	OSHA	IARC	NTP
4-chloro-α,α,α-trifluorotoluene	-	2B	-
titanium dioxide	-	2B	-
benzyl butyl phthalate	-	3	-
4-methylpentan-2-one	-	2B	-
ethylbenzene	-	2B	-
carbon black, respirable powder	-	2B	-

Carcinogen Classification code:

IARC: 1, 2A, 2B, 3, 4
NTP: Known to be a human carcinogen; Reasonably anticipated to be a human carcinogen
OSHA: +
Not listed/not regulated: -

Reproductive toxicity

Conclusion/Summary : There are no data available on the mixture itself.

Teratogenicity

Conclusion/Summary : There are no data available on the mixture itself.

Specific target organ toxicity (single exposure)

Name	Category	Route of exposure	Target organs
4-chloro-α,α,α-trifluorotoluene	Category 3	-	Respiratory tract irritation
Talc , not containing asbestiform fibres	Category 3	-	Respiratory tract irritation
2-methoxy-1-methylethyl acetate	Category 3	-	Narcotic effects
n-butyl acetate	Category 3	-	Narcotic effects
acetone	Category 3	-	Narcotic effects
4-methylpentan-2-one	Category 3	-	Respiratory tract irritation

Specific target organ toxicity (repeated exposure)

Section 11. Toxicological information

Name	Category	Route of exposure	Target organs
ethylbenzene	Category 2	-	hearing organs

Target organs : Contains material which causes damage to the following organs: brain, central nervous system (CNS).
Contains material which may cause damage to the following organs: kidneys, lungs, liver, gastrointestinal tract, cardiovascular system, upper respiratory tract, skin, adrenal, eye, lens or cornea, stomach, testes.

Aspiration hazard

Name	Result
ethylbenzene	ASPIRATION HAZARD - Category 1

Information on the likely routes of exposure

Potential acute health effects

Eye contact : Causes serious eye irritation.
Inhalation : May cause respiratory irritation.
Skin contact : Causes skin irritation. Defatting to the skin.
Ingestion : No known significant effects or critical hazards.

Over-exposure signs/symptoms

Eye contact : Adverse symptoms may include the following:
pain or irritation
watering
redness

Inhalation : Adverse symptoms may include the following:
respiratory tract irritation
coughing
reduced fetal weight
increase in fetal deaths
skeletal malformations

Skin contact : Adverse symptoms may include the following:
irritation
redness
dryness
cracking
reduced fetal weight
increase in fetal deaths
skeletal malformations

Ingestion : Adverse symptoms may include the following:
reduced fetal weight
increase in fetal deaths
skeletal malformations

Delayed and immediate effects and also chronic effects from short and long term exposure

Section 11. Toxicological information

Conclusion/Summary : There are no data available on the mixture itself. This product contains TiO2 which has been classified as a GHS Carcinogen Category 2 based on its IARC 2B classification. For many PPG products, TiO2 is utilized as a raw material in a liquid coating formulation. In this case, the TiO2 particles are bound in a matrix with no meaningful potential for human exposure to unbound particles of TiO2 when the product is applied with a brush or roller. Sanding the coating surface or mist from spray applications may be harmful depending on the duration and level of exposure and require the use of appropriate personal protective equipment and/or engineering controls (see Section 8). Exposure to component solvent vapor concentrations in excess of the stated occupational exposure limit may result in adverse health effects such as mucous membrane and respiratory system irritation and adverse effects on the kidneys, liver and central nervous system. Symptoms and signs include headache, dizziness, fatigue, muscular weakness, drowsiness and, in extreme cases, loss of consciousness. Solvents may cause some of the above effects by absorption through the skin. There is some evidence that repeated exposure to organic solvent vapors in combination with constant loud noise can cause greater hearing loss than expected from exposure to noise alone. If splashed in the eyes, the liquid may cause irritation and reversible damage. Ingestion may cause nausea, diarrhea and vomiting. This takes into account, where known, delayed and immediate effects and also chronic effects of components from short-term and long-term exposure by oral, inhalation and dermal routes of exposure and eye contact.

Short term exposure

Potential immediate effects : There are no data available on the mixture itself.

Potential delayed effects : There are no data available on the mixture itself.

Long term exposure

Potential immediate effects : There are no data available on the mixture itself.

Potential delayed effects : There are no data available on the mixture itself.

Potential chronic health effects

General : Prolonged or repeated contact can defat the skin and lead to irritation, cracking and/or dermatitis.

Carcinogenicity : Suspected of causing cancer. Risk of cancer depends on duration and level of exposure.

Mutagenicity : No known significant effects or critical hazards.

Reproductive toxicity : May damage fertility or the unborn child.

Numerical measures of toxicity

Acute toxicity estimates

Product/ingredient name	Oral (mg/kg)	Dermal (mg/kg)	Inhalation (gases) (ppm)	Inhalation (vapors) (mg/l)	Inhalation (dusts and mists) (mg/l)

Section 11. Toxicological information

A-CHROMATIC LV SEALER - GRAY	190505.9	3926.8	N/A	185.2	N/A
4-chloro-α,α,α-trifluorotoluene	13000	2500	N/A	33.08	N/A
barium sulfate	N/A	2500	N/A	N/A	N/A
2-methoxy-1-methylethyl acetate	6190	N/A	N/A	N/A	N/A
n-butyl acetate	10768	N/A	N/A	N/A	N/A
acetone	5800	15800	N/A	76	N/A
benzyl butyl phthalate	2330	6700	N/A	3	N/A
4-methylpentan-2-one	2080	N/A	N/A	12.3	1.5
ethylbenzene	3500	17800	N/A	17.8	1.5

Section 12. Ecological information

Toxicity

Product/ingredient name	Result	Species	Exposure
Titanium dioxide	Acute LC50 >100 mg/l Fresh water	Daphnia - Daphnia magna	48 hours
2-methoxy-1-methylethyl acetate	Acute LC50 134 mg/l Fresh water	Fish - Oncorhynchus mykiss	96 hours
n-butyl acetate	Acute LC50 18 mg/l	Fish	96 hours
acetone	Acute LC50 4.42589 ml/L Marine water	Crustaceans - Acartia tonsa - Copepodid	48 hours
	Acute LC50 5540 mg/l	Fish	96 hours
benzyl butyl phthalate	LC50 0.51 mg/l	Fish	96 hours
	Chronic EC10 0.57 mg/l Fresh water	Algae - Pseudokirchneriella subcapitata - Exponential growth phase	72 hours
4-methylpentan-2-one	Acute LC50 >179 mg/l	Fish	96 hours
ethylbenzene	Acute LC50 150 to 200 mg/l Fresh water	Fish	96 hours

Persistence and degradability

Product/ingredient name	Test	Result	Dose	Inoculum
2-methoxy-1-methylethyl acetate	-	83 % - Readily - 28 days	-	-
n-butyl acetate	TEPA and OECD 301D	83 % - Readily - 28 days	-	-
acetone	-	90.9 % - Readily - 28 days	-	-
4-methylpentan-2-one	OECD 301F	83 % - Readily - 28 days	-	-

Product/ingredient name	Aquatic half-life	Photolysis	Biodegradability
2-methoxy-1-methylethyl acetate	-	-	Readily
n-butyl acetate	-	-	Readily
acetone	-	-	Readily
4-methylpentan-2-one	-	-	Readily
ethylbenzene	-	-	Readily

Bioaccumulative potential

Section 12. Ecological information

Product/ingredient name	$LogP_{ow}$	BCF	Potential
2-methoxy-1-methylethyl acetate	0.56	-	low
n-butyl acetate	1.78	-	low
acetone	-0.24	3	low
benzyl butyl phthalate	4.73	16.22	low
4-methylpentan-2-one	1.31	-	low
ethylbenzene	3.15	79.43	low

Mobility in soil

Soil/water partition coefficient (K_{oc}) : Not available.

Section 13. Disposal considerations

Disposal methods : The generation of waste should be avoided or minimized wherever possible. Disposal of this product, solutions and any by-products should at all times comply with the requirements of environmental protection and waste disposal legislation and any regional local authority requirements. Dispose of surplus and non-recyclable products via a licensed waste disposal contractor. Waste should not be disposed of untreated to the sewer unless fully compliant with the requirements of all authorities with jurisdiction. Waste packaging should be recycled. Incineration or landfill should only be considered when recycling is not feasible. This material and its container must be disposed of in a safe way. Care should be taken when handling emptied containers that have not been cleaned or rinsed out. Empty containers or liners may retain some product residues. Vapor from product residues may create a highly flammable or explosive atmosphere inside the container. Do not cut, weld or grind used containers unless they have been cleaned thoroughly internally. Avoid dispersal of spilled material and runoff and contact with soil, waterways, drains and sewers.

Disposal should be in accordance with applicable regional, national and local laws and regulations.

Refer to Section 7: HANDLING AND STORAGE and Section 8: EXPOSURE CONTROLS/PERSONAL PROTECTION for additional handling information and protection of employees. Section 6. Accidental release measures

14. Transport information

	DOT	IMDG	IATA
UN number	UN1263	UN1263	UN1263
UN proper shipping name	PAINT	PAINT	PAINT
Transport hazard class (es)	3	3	3
Packing group	II	II	II
Environmental hazards	No.	No.	No.
Marine pollutant substances	Not applicable.	Not applicable.	Not applicable.
Product RQ (lbs)	9606.9	Not applicable.	Not applicable.

14. Transport information

RQ substances	(benzyl butyl phthalate, xylene)	Not applicable.	Not applicable.

Additional information

DOT : Package sizes shipped in quantities less than the product reportable quantity are not subject to the RQ (reportable quantity) transportation requirements.

IMDG : None identified.

IATA : None identified.

Special precautions for user : **Transport within user's premises:** always transport in closed containers that are upright and secure. Ensure that persons transporting the product know what to do in the event of an accident or spillage.

Transport in bulk according to IMO instruments : Not applicable.

Section 15. Regulatory information

United States

United States inventory (TSCA 8b) : All components are active or exempted.

U.S. Federal regulations :

United States - TSCA 5(a)2 - Final significant new use rules:

[redacted]-chloro-α,α,α-trifluorotoluene Listed 40 CFR 799.5089

SARA 302/304

SARA 304 RQ : Not applicable.

Composition/information on ingredients

No products were found.

SARA 311/312

Classification : FLAMMABLE LIQUIDS - Category 2
SKIN IRRITATION - Category 2
EYE IRRITATION - Category 2A
CARCINOGENICITY - Category 2
TOXIC TO REPRODUCTION - Category 1B
SPECIFIC TARGET ORGAN TOXICITY (SINGLE EXPOSURE) (Respiratory tract irritation) - Category 3
HNOC - Defatting irritant

Composition/information on ingredients

Name	%	Classification
[redacted]-chloro-α,α,α-trifluorotoluene	≥20 - ≤50	FLAMMABLE LIQUIDS - Category 3 SKIN IRRITATION - Category 2 EYE IRRITATION - Category 2A CARCINOGENICITY - Category 2 SPECIFIC TARGET ORGAN TOXICITY (SINGLE EXPOSURE) (Respiratory tract irritation) - Category 3 HNOC - Defatting irritant
Talc , not containing asbestiform fibres	≥5.0 - ≤10	SPECIFIC TARGET ORGAN TOXICITY (SINGLE EXPOSURE) (Respiratory tract irritation) - Category 3

Section 15. Regulatory information

titanium dioxide	≥5.0 - ≤10	CARCINOGENICITY - Category 2
2-methoxy-1-methylethyl acetate	≥1.0 - ≤5.0	FLAMMABLE LIQUIDS - Category 3 SPECIFIC TARGET ORGAN TOXICITY (SINGLE EXPOSURE) (Narcotic effects) - Category 3
n-butyl acetate	≥1.0 - ≤5.0	FLAMMABLE LIQUIDS - Category 2 SPECIFIC TARGET ORGAN TOXICITY (SINGLE EXPOSURE) (Narcotic effects) - Category 3 HNOC - Defatting irritant
acetone	≥1.0 - ≤4.9	FLAMMABLE LIQUIDS - Category 2 EYE IRRITATION - Category 2A SPECIFIC TARGET ORGAN TOXICITY (SINGLE EXPOSURE) (Narcotic effects) - Category 3 HNOC - Defatting irritant
benzyl butyl phthalate	≥1.0 - ≤5.0	ACUTE TOXICITY (inhalation) - Category 3 TOXIC TO REPRODUCTION - Category 1B
4-methylpentan-2-one	<1.0	FLAMMABLE LIQUIDS - Category 2 ACUTE TOXICITY (inhalation) - Category 4 EYE IRRITATION - Category 2A CARCINOGENICITY - Category 2 SPECIFIC TARGET ORGAN TOXICITY (SINGLE EXPOSURE) (Respiratory tract irritation) - Category 3 HNOC - Defatting irritant
ethylbenzene	<1.0	FLAMMABLE LIQUIDS - Category 2 ACUTE TOXICITY (inhalation) - Category 4 CARCINOGENICITY - Category 2 SPECIFIC TARGET ORGAN TOXICITY (REPEATED EXPOSURE) - Category 2 ASPIRATION HAZARD - Category 1 HNOC - Defatting irritant
carbon black, respirable powder	≤1.0	CARCINOGENICITY - Category 2

SARA 313

	Chemical name	CAS number	Concentration
Supplier notification :	4-methylpentan-2-one	108-10-1	0.1 - 1
	ethylbenzene	100-41-4	0.1 - 1

SARA 313 notifications must not be detached from the SDS and any copying and redistribution of the SDS shall include copying and redistribution of the notice attached to copies of the SDS subsequently redistributed.

Additional environmental information is contained on the Environmental Data Sheet for this product, which can be obtained from your PPG representative.

California Prop. 65

⚠ **WARNING**: Cancer and Reproductive Harm - www.P65Warnings.ca.gov.

Section 16. Other information

Hazardous Material Information System (U.S.A.)

Health : 2 * **Flammability** : 3 **Physical hazards** : 0
(*) - Chronic effects

Caution: HMIS® ratings are based on a 0-4 rating scale, with 0 representing minimal hazards or risks, and 4 representing significant hazards or risks. Although HMIS® ratings and the associated label are not required on MSDSs or products leaving a facility under 29 CFR 1910.1200, the preparer may choose to provide them. HMIS® ratings are to be used with a fully implemented HMIS® program. HMIS® is a registered trademark and service mark of the American Coatings Association, Inc.

The customer is responsible for determining the PPE code for this material. For more information on HMIS® Personal Protective Equipment (PPE) codes, consult the HMIS® Implementation Manual.

National Fire Protection Association (U.S.A.)

Health : 2 **Flammability** : 3 **Instability** : 0

Date of previous issue : **1/27/2021**

Organization that prepared the SDS : EHS

Key to abbreviations : ATE = Acute Toxicity Estimate
BCF = Bioconcentration Factor
GHS = Globally Harmonized System of Classification and Labelling of Chemicals
IATA = International Air Transport Association
IBC = Intermediate Bulk Container
IMDG = International Maritime Dangerous Goods
LogPow = logarithm of the octanol/water partition coefficient
MARPOL = International Convention for the Prevention of Pollution From Ships, 1973 as modified by the Protocol of 1978. ("Marpol" = marine pollution)
N/A = Not available
SGG = Segregation Group
UN = United Nations

◤ **Indicates information that has changed from previously issued version.**

Disclaimer

The information contained in this data sheet is based on present scientific and technical knowledge. The purpose of this information is to draw attention to the health and safety aspects concerning the products supplied by PPG, and to recommend precautionary measures for the storage and handling of the products. No warranty or guarantee is given in respect of the properties of the products. No liability can be accepted for any failure to observe the precautionary measures described in this data sheet or for any misuse of the products.

SAFETY DATA SHEET

Date of issue/Date of revision **31 July 2020**
Version 12

Section 1. Identification

Product name	: MEDIUM COMPLIANT THINNER
Product code	: D8774
Other means of identification	: Not available.
Product type	: Liquid.

Relevant identified uses of the substance or mixture and uses advised against

Product use	: Industrial applications.
Use of the substance/ mixture	: Coating. Paints. Painting-related materials.
Uses advised against	: Not applicable.

Manufacturer	: PPG Industries, Inc. One PPG Place, Pittsburgh, PA 15272
Emergency telephone number	: (412) 434-4515 (U.S.) (514) 645-1320 (Canada) SETIQ Interior de la República: 800-00-214-00 (México) SETIQ Ciudad de México: (55) 5559-1588 (México)
Technical Phone Number	: 1-800-647-6050

Section 2. Hazards identification

OSHA/HCS status	: This material is considered hazardous by the OSHA Hazard Communication Standard (29 CFR 1910.1200).
Classification of the substance or mixture	: FLAMMABLE LIQUIDS - Category 2 SKIN IRRITATION - Category 2 EYE IRRITATION - Category 2A CARCINOGENICITY - Category 2 SPECIFIC TARGET ORGAN TOXICITY (SINGLE EXPOSURE) (Respiratory tract irritation) - Category 3

GHS label elements

Hazard pictograms :

Signal word : Danger

Section 2. Hazards identification

Hazard statements : Highly flammable liquid and vapor.
Causes skin irritation.
Causes serious eye irritation.
May cause respiratory irritation.
Suspected of causing cancer.

Precautionary statements

Prevention : Obtain special instructions before use. Do not handle until all safety precautions have been read and understood. Wear protective gloves, protective clothing and eye or face protection. Keep away from heat, hot surfaces, sparks, open flames and other ignition sources. No smoking. Use explosion-proof electrical, ventilating or lighting equipment. Use non-sparking tools. Take action to prevent static discharges. Use only outdoors or in a well-ventilated area. Avoid breathing vapor. Wash thoroughly after handling.

Response : If exposed or concerned: Get medical advice or attention. IF INHALED: Remove person to fresh air and keep comfortable for breathing. Call a POISON CENTER or doctor if you feel unwell. IF ON SKIN (or hair): Take off immediately all contaminated clothing. Rinse skin with water. IF ON SKIN: Wash with plenty of water. If skin irritation occurs: Get medical advice or attention. IF IN EYES: Rinse cautiously with water for several minutes. Remove contact lenses, if present and easy to do. Continue rinsing. If eye irritation persists: Get medical advice or attention.

Storage : Store locked up. Store in a well-ventilated place. Keep container tightly closed. Keep cool.

Disposal : Dispose of contents and container in accordance with all local, regional, national and international regulations.

Supplemental label elements : Repeated exposure to high vapor concentrations may cause irritation of the respiratory system and permanent brain and nervous system damage. Inhalation of vapor/aerosol concentrations above the recommended exposure limits causes headaches, drowsiness and nausea and may lead to unconsciousness or death. Avoid contact with skin and clothing. Wash thoroughly after handling. Emits toxic fumes when heated.

Hazards not otherwise classified : Prolonged or repeated contact may dry skin and cause irritation.

Section 3. Composition/information on ingredients

Substance/mixture : Mixture
Product name : MEDIUM COMPLIANT THINNER

Ingredient name	%	CAS number
4-chloro-α,α,α-trifluorotoluene	≥75 - ≤90	98-56-6
acetone	≥10 - <20	67-64-1

SUB codes represent substances without registered CAS Numbers.

Any concentration shown as a range is to protect confidentiality or is due to batch variation.

There are no additional ingredients present which, within the current knowledge of the supplier and in the concentrations applicable, are classified as hazardous to health or the environment and hence require reporting in this section.

Occupational exposure limits, if available, are listed in Section 8.

Section 4. First aid measures

If ingestion, irritation, any type of overexposure or symptoms of overexposure occur during or persists after use of this product, contact a POISON CONTROL CENTER, EMERGENCY ROOM OR PHYSICIAN immediately; have Safety Data Sheet information available. Never give anything by mouth to an unconscious or convulsing person.

Description of necessary first aid measures

Eye contact : Remove contact lenses, irrigate copiously with clean, fresh water, holding the eyelids apart for at least 10 minutes and seek immediate medical advice.

Inhalation : Remove to fresh air. Keep person warm and at rest. If not breathing, if breathing is irregular or if respiratory arrest occurs, provide artificial respiration or oxygen by trained personnel.

Skin contact : Remove contaminated clothing and shoes. Wash skin thoroughly with soap and water or use recognized skin cleanser. Do NOT use solvents or thinners.

Ingestion : If swallowed, seek medical advice immediately and show this container or label. Keep person warm and at rest. Do NOT induce vomiting.

Most important symptoms/effects, acute and delayed

Potential acute health effects

Eye contact : Causes serious eye irritation.

Inhalation : May cause respiratory irritation.

Skin contact : Causes skin irritation. Defatting to the skin.

Ingestion : No known significant effects or critical hazards.

Over-exposure signs/symptoms

Eye contact : Adverse symptoms may include the following:
pain or irritation
watering
redness

Inhalation : Adverse symptoms may include the following:
respiratory tract irritation
coughing

Skin contact : Adverse symptoms may include the following:
irritation
redness
dryness
cracking

Ingestion : No specific data.

Indication of immediate medical attention and special treatment needed, if necessary

Notes to physician : In case of inhalation of decomposition products in a fire, symptoms may be delayed. The exposed person may need to be kept under medical surveillance for 48 hours.

Specific treatments : No specific treatment.

Protection of first-aiders : No action shall be taken involving any personal risk or without suitable training. If it is suspected that fumes are still present, the rescuer should wear an appropriate mask or self-contained breathing apparatus. It may be dangerous to the person providing aid to give mouth-to-mouth resuscitation.

See toxicological information (Section 11)

Section 5. Fire-fighting measures

Extinguishing media

Suitable extinguishing media : Use dry chemical, CO_2, water spray (fog) or foam.

Unsuitable extinguishing media : Do not use water jet.

Specific hazards arising from the chemical : Highly flammable liquid and vapor. In a fire or if heated, a pressure increase will occur and the container may burst, with the risk of a subsequent explosion. Runoff to sewer may create fire or explosion hazard.

Hazardous thermal decomposition products : Decomposition products may include the following materials:
carbon oxides
halogenated compounds
carbonyl halides

Special protective actions for fire-fighters : Promptly isolate the scene by removing all persons from the vicinity of the incident if there is a fire. No action shall be taken involving any personal risk or without suitable training. Move containers from fire area if this can be done without risk. Use water spray to keep fire-exposed containers cool.

Special protective equipment for fire-fighters : Fire-fighters should wear appropriate protective equipment and self-contained breathing apparatus (SCBA) with a full face-piece operated in positive pressure mode.

Section 6. Accidental release measures

Personal precautions, protective equipment and emergency procedures

For non-emergency personnel : No action shall be taken involving any personal risk or without suitable training. Evacuate surrounding areas. Keep unnecessary and unprotected personnel from entering. Do not touch or walk through spilled material. Shut off all ignition sources. No flares, smoking or flames in hazard area. Avoid breathing vapor or mist. Provide adequate ventilation. Wear appropriate respirator when ventilation is inadequate. Put on appropriate personal protective equipment.

For emergency responders : If specialized clothing is required to deal with the spillage, take note of any information in Section 8 on suitable and unsuitable materials. See also the information in "For non-emergency personnel".

Environmental precautions : Avoid dispersal of spilled material and runoff and contact with soil, waterways, drains and sewers. Inform the relevant authorities if the product has caused environmental pollution (sewers, waterways, soil or air).

Methods and materials for containment and cleaning up

Small spill : Stop leak if without risk. Move containers from spill area. Use spark-proof tools and explosion-proof equipment. Dilute with water and mop up if water-soluble. Alternatively, or if water-insoluble, absorb with an inert dry material and place in an appropriate waste disposal container. Dispose of via a licensed waste disposal contractor.

Section 6. Accidental release measures

Large spill : Stop leak if without risk. Move containers from spill area. Use spark-proof tools and explosion-proof equipment. Approach release from upwind. Prevent entry into sewers, water courses, basements or confined areas. Wash spillages into an effluent treatment plant or proceed as follows. Contain and collect spillage with non-combustible, absorbent material e.g. sand, earth, vermiculite or diatomaceous earth and place in container for disposal according to local regulations (see Section 13). Dispose of via a licensed waste disposal contractor. Contaminated absorbent material may pose the same hazard as the spilled product. Note: see Section 1 for emergency contact information and Section 13 for waste disposal.

Section 7. Handling and storage

Precautions for safe handling

Protective measures : Put on appropriate personal protective equipment (see Section 8). Avoid exposure - obtain special instructions before use. Do not handle until all safety precautions have been read and understood. Do not get in eyes or on skin or clothing. Do not ingest. Avoid breathing vapor or mist. Use only with adequate ventilation. Wear appropriate respirator when ventilation is inadequate. Do not enter storage areas and confined spaces unless adequately ventilated. Keep in the original container or an approved alternative made from a compatible material, kept tightly closed when not in use. Store and use away from heat, sparks, open flame or any other ignition source. Use explosion-proof electrical (ventilating, lighting and material handling) equipment. Use only non-sparking tools. Take precautionary measures against electrostatic discharges. Empty containers retain product residue and can be hazardous. Do not reuse container.

Special precautions : If this material is part of a multiple component system, read the Safety Data Sheet(s) for the other component or components before blending as the resulting mixture may have the hazards of all of its parts.

Advice on general occupational hygiene : Eating, drinking and smoking should be prohibited in areas where this material is handled, stored and processed. Workers should wash hands and face before eating, drinking and smoking. Remove contaminated clothing and protective equipment before entering eating areas. See also Section 8 for additional information on hygiene measures.

Conditions for safe storage, including any incompatibilities : Do not store below the following temperature: 5°C (41°F). Store in accordance with local regulations. Store in a segregated and approved area. Store in original container protected from direct sunlight in a dry, cool and well-ventilated area, away from incompatible materials (see Section 10) and food and drink. Store locked up. Eliminate all ignition sources. Separate from oxidizing materials. Keep container tightly closed and sealed until ready for use. Containers that have been opened must be carefully resealed and kept upright to prevent leakage. Do not store in unlabeled containers. Use appropriate containment to avoid environmental contamination.

Section 8. Exposure controls/personal protection

Control parameters

Occupational exposure limits

Section 8. Exposure controls/personal protection

Ingredient name	Exposure limits
[redacted]-chloro-α,α,α-trifluorotoluene	**IPEL (PPG).** TWA: 0.57 ppm STEL: 1.71 ppm
acetone	**ACGIH TLV (United States, 3/2019).** STEL: 500 ppm 15 minutes. TWA: 250 ppm 8 hours. **OSHA PEL (United States, 5/2018).** TWA: 2400 mg/m³ 8 hours. TWA: 1000 ppm 8 hours.

Key to abbreviations

A	= Acceptable Maximum Peak	S	= Potential skin absorption
ACGIH	= American Conference of Governmental Industrial Hygienists.	SR	= Respiratory sensitization
C	= Ceiling Limit	SS	= Skin sensitization
F	= Fume	STEL	= Short term Exposure limit values
IPEL	= Internal Permissible Exposure Limit	TD	= Total dust
OSHA	= Occupational Safety and Health Administration.	TLV	= Threshold Limit Value
R	= Respirable	TWA	= Time Weighted Average
Z	= OSHA 29 CFR 1910.1200 Subpart Z - Toxic and Hazardous Substances		

Consult local authorities for acceptable exposure limits.

Recommended monitoring procedures : If this product contains ingredients with exposure limits, personal, workplace atmosphere or biological monitoring may be required to determine the effectiveness of the ventilation or other control measures and/or the necessity to use respiratory protective equipment. Reference should be made to appropriate monitoring standards. Reference to national guidance documents for methods for the determination of hazardous substances will also be required.

Appropriate engineering controls : Use only with adequate ventilation. Use process enclosures, local exhaust ventilation or other engineering controls to keep worker exposure to airborne contaminants below any recommended or statutory limits. The engineering controls also need to keep gas, vapor or dust concentrations below any lower explosive limits. Use explosion-proof ventilation equipment.

Environmental exposure controls : Emissions from ventilation or work process equipment should be checked to ensure they comply with the requirements of environmental protection legislation. In some cases, fume scrubbers, filters or engineering modifications to the process equipment will be necessary to reduce emissions to acceptable levels.

Individual protection measures

Hygiene measures : Wash hands, forearms and face thoroughly after handling chemical products, before eating, smoking and using the lavatory and at the end of the working period. Appropriate techniques should be used to remove potentially contaminated clothing. Wash contaminated clothing before reusing. Ensure that eyewash stations and safety showers are close to the workstation location.

Eye/face protection : Chemical splash goggles.

Skin protection

Section 8. Exposure controls/personal protection

Hand protection : Chemical-resistant, impervious gloves complying with an approved standard should be worn at all times when handling chemical products if a risk assessment indicates this is necessary. Considering the parameters specified by the glove manufacturer, check during use that the gloves are still retaining their protective properties. It should be noted that the time to breakthrough for any glove material may be different for different glove manufacturers. In the case of mixtures, consisting of several substances, the protection time of the gloves cannot be accurately estimated.

Gloves : For prolonged or repeated handling, use the following type of gloves:

Recommended: butyl rubber

Body protection : Personal protective equipment for the body should be selected based on the task being performed and the risks involved and should be approved by a specialist before handling this product. When there is a risk of ignition from static electricity, wear anti-static protective clothing. For the greatest protection from static discharges, clothing should include anti-static overalls, boots and gloves.

Other skin protection : Appropriate footwear and any additional skin protection measures should be selected based on the task being performed and the risks involved and should be approved by a specialist before handling this product.

Respiratory protection : Respirator selection must be based on known or anticipated exposure levels, the hazards of the product and the safe working limits of the selected respirator. If workers are exposed to concentrations above the exposure limit, they must use appropriate, certified respirators. Use a properly fitted, air-purifying or air-fed respirator complying with an approved standard if a risk assessment indicates this is necessary.

Section 9. Physical and chemical properties

Appearance

Physical state : Liquid.

Color : Clear.

Odor : Not available.

Odor threshold : Not available.

pH : Not available.

Melting point : Not available.

Boiling point : >37.78°C (>100°F)

Flash point : Closed cup: 1.67°C (35°F)

Auto-ignition temperature : Not available.

Decomposition temperature : Not available.

Flammability (solid, gas) : Not available.

Lower and upper explosive (flammable) limits : Not available.

Evaporation rate : Not available.

Vapor pressure : Not available.

Vapor density : Not available.

Relative density : 1.2

Density (lbs / gal) : 10.01

Solubility : Partially soluble in the following materials: cold water.

Section 9. Physical and chemical properties

Partition coefficient: n-octanol/water : Not available.

Viscosity : Kinematic (40°C (104°F)): <0.14 cm^2/s (<14 cSt)

Volatility : 100% (v/v), 100% (w/w)

% Solid. (w/w) : 0

Section 10. Stability and reactivity

Reactivity : No specific test data related to reactivity available for this product or its ingredients.

Chemical stability : The product is stable.

Possibility of hazardous reactions : Under normal conditions of storage and use, hazardous reactions will not occur.

Conditions to avoid : When exposed to high temperatures may produce hazardous decomposition products. Refer to protective measures listed in sections 7 and 8.

Incompatible materials : Keep away from the following materials to prevent strong exothermic reactions: oxidizing agents, strong alkalis, strong acids.

Hazardous decomposition products : Decomposition products may include the following materials: carbon monoxide, carbon dioxide, smoke, oxides of nitrogen.

Section 11. Toxicological information

Information on toxicological effects

Acute toxicity

Product/ingredient name	Result	Species	Dose	Exposure
4-chloro-α,α,α-trifluorotoluene	LC50 Inhalation Vapor	Rat	33080 mg/m³	4 hours
	LD50 Dermal	Rabbit	>2.7 g/kg	-
	LD50 Oral	Rat	13 g/kg	-
acetone	LC50 Inhalation Vapor	Rat	76000 mg/m³	4 hours
	LD50 Dermal	Rabbit	15.8 g/kg	-
	LD50 Oral	Rat	5800 mg/kg	-

Conclusion/Summary : There are no data available on the mixture itself.

Irritation/Corrosion

Conclusion/Summary

Skin : There are no data available on the mixture itself.

Eyes : There are no data available on the mixture itself.

Respiratory : There are no data available on the mixture itself.

Sensitization

Conclusion/Summary

Skin : There are no data available on the mixture itself.

Respiratory : There are no data available on the mixture itself.

Section 11. Toxicological information

Mutagenicity

Conclusion/Summary : There are no data available on the mixture itself.

Carcinogenicity

Conclusion/Summary : There are no data available on the mixture itself.

Classification

Product/ingredient name	OSHA	IARC	NTP
4-chloro-α,α,α-trifluorotoluene	-	2B	-

Carcinogen Classification code:

IARC: 1, 2A, 2B, 3, 4
NTP: Known to be a human carcinogen; Reasonably anticipated to be a human carcinogen
OSHA: +
Not listed/not regulated: -

Reproductive toxicity

Conclusion/Summary : There are no data available on the mixture itself.

Teratogenicity

Conclusion/Summary : There are no data available on the mixture itself.

Specific target organ toxicity (single exposure)

Name	Category	Route of exposure	Target organs
4-chloro-α,α,α-trifluorotoluene	Category 3	-	Respiratory tract irritation
acetone	Category 3	-	Narcotic effects

Specific target organ toxicity (repeated exposure)

Not available.

Target organs : Contains material which causes damage to the following organs: brain, central nervous system (CNS).
Contains material which may cause damage to the following organs: liver, gastrointestinal tract, upper respiratory tract, skin, adrenal, eye, lens or cornea.

Aspiration hazard

Not available.

Information on the likely routes of exposure

Potential acute health effects

Eye contact : Causes serious eye irritation.
Inhalation : May cause respiratory irritation.
Skin contact : Causes skin irritation. Defatting to the skin.
Ingestion : No known significant effects or critical hazards.

Over-exposure signs/symptoms

Eye contact : Adverse symptoms may include the following:
pain or irritation
watering
redness

Section 11. Toxicological information

Inhalation : Adverse symptoms may include the following:
respiratory tract irritation
coughing

Skin contact : Adverse symptoms may include the following:
irritation
redness
dryness
cracking

Ingestion : No specific data.

Delayed and immediate effects and also chronic effects from short and long term exposure

Conclusion/Summary : There are no data available on the mixture itself. Exposure to component solvent vapor concentrations in excess of the stated occupational exposure limit may result in adverse health effects such as mucous membrane and respiratory system irritation and adverse effects on the kidneys, liver and central nervous system. Symptoms and signs include headache, dizziness, fatigue, muscular weakness, drowsiness and, in extreme cases, loss of consciousness. Solvents may cause some of the above effects by absorption through the skin. There is some evidence that repeated exposure to organic solvent vapors in combination with constant loud noise can cause greater hearing loss than expected from exposure to noise alone. If splashed in the eyes, the liquid may cause irritation and reversible damage. Ingestion may cause nausea, diarrhea and vomiting. This takes into account, where known, delayed and immediate effects and also chronic effects of components from short-term and long-term exposure by oral, inhalation and dermal routes of exposure and eye contact.

Short term exposure

Potential immediate effects : There are no data available on the mixture itself.

Potential delayed effects : There are no data available on the mixture itself.

Long term exposure

Potential immediate effects : There are no data available on the mixture itself.

Potential delayed effects : There are no data available on the mixture itself.

Potential chronic health effects

General : Prolonged or repeated contact can defat the skin and lead to irritation, cracking and/or dermatitis.

Carcinogenicity : Suspected of causing cancer. Risk of cancer depends on duration and level of exposure.

Mutagenicity : No known significant effects or critical hazards.

Reproductive toxicity : No known significant effects or critical hazards.

Numerical measures of toxicity

Acute toxicity estimates

Product/ingredient name	Oral (mg/kg)	Dermal (mg/kg)	Inhalation (gases) (ppm)	Inhalation (vapors) (mg/l)	Inhalation (dusts and mists) (mg/l)
MEDIUM COMPLIANT THINNER	N/A	3016.9	N/A	N/A	N/A
4-chloro-α,α,α-trifluorotoluene	13000	2500	N/A	33.08	N/A
acetone	5800	15800	N/A	76	N/A

Section 11. Toxicological information

Section 12. Ecological information

Toxicity

Product/ingredient name	Result	Species	Exposure
acetone	Acute LC50 4.42589 ml/L Marine water Acute LC50 5540 mg/l	Crustaceans - Acartia tonsa - Copepodid Fish	48 hours 96 hours

Persistence and degradability

Product/ingredient name	Test	Result	Dose	Inoculum
acetone	-	90.9 % - Readily - 28 days	-	-

Product/ingredient name	Aquatic half-life	Photolysis	Biodegradability
acetone	-	-	Readily

Bioaccumulative potential

Product/ingredient name	$LogP_{ow}$	BCF	Potential
acetone	-0.24	3	low

Mobility in soil

Soil/water partition coefficient (K_{oc}) : Not available.

Section 13. Disposal considerations

Disposal methods : The generation of waste should be avoided or minimized wherever possible. Disposal of this product, solutions and any by-products should at all times comply with the requirements of environmental protection and waste disposal legislation and any regional local authority requirements. Dispose of surplus and non-recyclable products via a licensed waste disposal contractor. Waste should not be disposed of untreated to the sewer unless fully compliant with the requirements of all authorities with jurisdiction. Waste packaging should be recycled. Incineration or landfill should only be considered when recycling is not feasible. This material and its container must be disposed of in a safe way. Care should be taken when handling emptied containers that have not been cleaned or rinsed out. Empty containers or liners may retain some product residues. Vapor from product residues may create a highly flammable or explosive atmosphere inside the container. Do not cut, weld or grind used containers unless they have been cleaned thoroughly internally. Avoid dispersal of spilled material and runoff and contact with soil, waterways, drains and sewers.

Disposal should be in accordance with applicable regional, national and local laws and regulations.

Refer to Section 7: HANDLING AND STORAGE and Section 8: EXPOSURE CONTROLS/PERSONAL PROTECTION for additional handling information and protection of employees. Section 6. Accidental release measures

14. Transport information

	DOT	IMDG	IATA
UN number	UN1263	UN1263	UN1263
UN proper shipping name	PAINT RELATED MATERIAL	PAINT RELATED MATERIAL	PAINT RELATED MATERIAL
Transport hazard class (es)	3	3	3
Packing group	II	II	II
Environmental hazards	No.	No.	No.
Marine pollutant substances	Not applicable.	Not applicable.	Not applicable.
Product RQ (lbs)	30678.4	Not applicable.	Not applicable.
RQ substances	(acetone)	Not applicable.	Not applicable.

Additional information

DOT : Package sizes shipped in quantities less than the product reportable quantity are not subject to the RQ (reportable quantity) transportation requirements.

IMDG : None identified.

IATA : None identified.

Special precautions for user : **Transport within user's premises:** always transport in closed containers that are upright and secure. Ensure that persons transporting the product know what to do in the event of an accident or spillage.

Transport in bulk according to IMO instruments : Not applicable.

Section 15. Regulatory information

United States

United States inventory (TSCA 8b) : All components are active or exempted.

U.S. Federal regulations :

United States - TSCA 12(b) - Chemical export notification:

4-chloro-α,α,α-trifluorotoluene — One time notification

United States - TSCA 5(a)2 - Final significant new use rules:

4-chloro-α,α,α-trifluorotoluene — Listed — 40 CFR 799.5089

SARA 302/304

SARA 304 RQ : Not applicable.

Composition/information on ingredients

No products were found.

SARA 311/312

Section 15. Regulatory information

Classification : FLAMMABLE LIQUIDS - Category 2
SKIN IRRITATION - Category 2
EYE IRRITATION - Category 2A
CARCINOGENICITY - Category 2
SPECIFIC TARGET ORGAN TOXICITY (SINGLE EXPOSURE) (Respiratory tract irritation) - Category 3
HNOC - Defatting irritant

Composition/information on ingredients

Name	%	Classification
-chloro-α,α,α-trifluorotoluene	≥75 - ≤90	FLAMMABLE LIQUIDS - Category 3 SKIN IRRITATION - Category 2 EYE IRRITATION - Category 2A CARCINOGENICITY - Category 2 SPECIFIC TARGET ORGAN TOXICITY (SINGLE EXPOSURE) (Respiratory tract irritation) - Category 3 HNOC - Defatting irritant
acetone	≥10 - <20	FLAMMABLE LIQUIDS - Category 2 EYE IRRITATION - Category 2A SPECIFIC TARGET ORGAN TOXICITY (SINGLE EXPOSURE) (Narcotic effects) - Category 3 HNOC - Defatting irritant

Additional environmental information is contained on the Environmental Data Sheet for this product, which can be obtained from your PPG representative.

California Prop. 65

⚠ **WARNING**: Cancer - www.P65Warnings.ca.gov.

Section 16. Other information

Hazardous Material Information System (U.S.A.)

Health : 2 * **Flammability** : 3 **Physical hazards** : 0

(*) - Chronic effects

Caution: HMIS® ratings are based on a 0-4 rating scale, with 0 representing minimal hazards or risks, and 4 representing significant hazards or risks. Although HMIS® ratings and the associated label are not required on MSDSs or products leaving a facility under 29 CFR 1910.1200, the preparer may choose to provide them. HMIS® ratings are to be used with a fully implemented HMIS® program. HMIS® is a registered trademark and service mark of the American Coatings Association, Inc.

The customer is responsible for determining the PPE code for this material. For more information on HMIS® Personal Protective Equipment (PPE) codes, consult the HMIS® Implementation Manual.

National Fire Protection Association (U.S.A.)

Health : 2 **Flammability** : 3 **Instability** : 0

Date of previous issue : **6/14/2020**

Organization that prepared the MSDS : EHS

Section 16. Other information

Key to abbreviations : ATE = Acute Toxicity Estimate
BCF = Bioconcentration Factor
GHS = Globally Harmonized System of Classification and Labelling of Chemicals
IATA = International Air Transport Association
IBC = Intermediate Bulk Container
IMDG = International Maritime Dangerous Goods
LogPow = logarithm of the octanol/water partition coefficient
MARPOL = International Convention for the Prevention of Pollution From Ships, 1973 as modified by the Protocol of 1978. ("Marpol" = marine pollution)
N/A = Not available
SGG = Segregation Group
UN = United Nations

◤ **Indicates information that has changed from previously issued version.**

Disclaimer

The information contained in this data sheet is based on present scientific and technical knowledge. The purpose of this information is to draw attention to the health and safety aspects concerning the products supplied by PPG, and to recommend precautionary measures for the storage and handling of the products. No warranty or guarantee is given in respect of the properties of the products. No liability can be accepted for any failure to observe the precautionary measures described in this data sheet or for any misuse of the products.

SAFETY DATA SHEET

Date of issue/Date of revision **18 February 2021**
Version 8.01

Section 1. Identification

Product name : SLOW COMPLIANT THINNER
Product code : D8767
Other means of identification : Not available.
Product type : Liquid.

Relevant identified uses of the substance or mixture and uses advised against

Product use : Industrial applications.
Use of the substance/ mixture : Thinner.
Uses advised against : Not applicable.

Manufacturer : PPG Industries, Inc.
One PPG Place,
Pittsburgh, PA 15272
Emergency telephone number : (412) 434-4515 (U.S.)
(514) 645-1320 (Canada)
SETIQ Interior de la República: 800-00-214-00 (México)
SETIQ Ciudad de México: (55) 5559-1588 (México)

Technical Phone Number : 1-800-647-6050

Section 2. Hazards identification

OSHA/HCS status : This material is considered hazardous by the OSHA Hazard Communication Standard (29 CFR 1910.1200).
Classification of the substance or mixture : FLAMMABLE LIQUIDS - Category 3
SKIN IRRITATION - Category 2
EYE IRRITATION - Category 2A
CARCINOGENICITY - Category 2
SPECIFIC TARGET ORGAN TOXICITY (SINGLE EXPOSURE) (Respiratory tract irritation) - Category 3

GHS label elements

Hazard pictograms :

Signal word : Warning

Section 2. Hazards identification

Hazard statements : Flammable liquid and vapor.
Causes skin irritation.
Causes serious eye irritation.
May cause respiratory irritation.
Suspected of causing cancer.

Precautionary statements

Prevention : Obtain special instructions before use. Do not handle until all safety precautions have been read and understood. Wear protective gloves, protective clothing and eye or face protection. Keep away from heat, hot surfaces, sparks, open flames and other ignition sources. No smoking. Use explosion-proof electrical, ventilating or lighting equipment. Use non-sparking tools. Take action to prevent static discharges. Use only outdoors or in a well-ventilated area. Avoid breathing vapor. Wash thoroughly after handling.

Response : IF exposed or concerned: Get medical advice or attention. IF INHALED: Remove person to fresh air and keep comfortable for breathing. Call a POISON CENTER or doctor if you feel unwell. IF ON SKIN (or hair): Take off immediately all contaminated clothing. Rinse skin with water. IF ON SKIN: Wash with plenty of water. If skin irritation occurs: Get medical advice or attention. IF IN EYES: Rinse cautiously with water for several minutes. Remove contact lenses, if present and easy to do. Continue rinsing. If eye irritation persists: Get medical advice or attention.

Storage : Store locked up. Store in a well-ventilated place. Keep container tightly closed. Keep cool.

Disposal : Dispose of contents and container in accordance with all local, regional, national and international regulations.

Supplemental label elements : Repeated exposure to high vapor concentrations may cause irritation of the respiratory system and permanent brain and nervous system damage. Inhalation of vapor/aerosol concentrations above the recommended exposure limits causes headaches, drowsiness and nausea and may lead to unconsciousness or death. Avoid contact with skin and clothing. Wash thoroughly after handling. Emits toxic fumes when heated.

Hazards not otherwise classified : Prolonged or repeated contact may dry skin and cause irritation.

Section 3. Composition/information on ingredients

Substance/mixture : Mixture
Product name : SLOW COMPLIANT THINNER

Ingredient name	%	CAS number
4-chloro-α,α,α-trifluorotoluene	≥90	98-56-6

SUB codes represent substances without registered CAS Numbers.

Any concentration shown as a range is to protect confidentiality or is due to batch variation.

There are no additional ingredients present which, within the current knowledge of the supplier and in the concentrations applicable, are classified as hazardous to health or the environment and hence require reporting in this section.

Occupational exposure limits, if available, are listed in Section 8.

Section 4. First aid measures

If ingestion, irritation, any type of overexposure or symptoms of overexposure occur during or persists after use of this product, contact a POISON CONTROL CENTER, EMERGENCY ROOM OR PHYSICIAN immediately; have Safety Data Sheet information available. Never give anything by mouth to an unconscious or convulsing person.

Description of necessary first aid measures

Eye contact : Remove contact lenses, irrigate copiously with clean, fresh water, holding the eyelids apart for at least 10 minutes and seek immediate medical advice.

Inhalation : Remove to fresh air. Keep person warm and at rest. If not breathing, if breathing is irregular or if respiratory arrest occurs, provide artificial respiration or oxygen by trained personnel.

Skin contact : Remove contaminated clothing and shoes. Wash skin thoroughly with soap and water or use recognized skin cleanser. Do NOT use solvents or thinners.

Ingestion : If swallowed, seek medical advice immediately and show this container or label. Keep person warm and at rest. Do NOT induce vomiting.

Most important symptoms/effects, acute and delayed

Potential acute health effects

Eye contact : Causes serious eye irritation.

Inhalation : May cause respiratory irritation.

Skin contact : Causes skin irritation. Defatting to the skin.

Ingestion : No known significant effects or critical hazards.

Over-exposure signs/symptoms

Eye contact : Adverse symptoms may include the following:
pain or irritation
watering
redness

Inhalation : Adverse symptoms may include the following:
respiratory tract irritation
coughing

Skin contact : Adverse symptoms may include the following:
irritation
redness
dryness
cracking

Ingestion : No specific data.

Indication of immediate medical attention and special treatment needed, if necessary

Notes to physician : In case of inhalation of decomposition products in a fire, symptoms may be delayed. The exposed person may need to be kept under medical surveillance for 48 hours.

Specific treatments : No specific treatment.

Protection of first-aiders : No action shall be taken involving any personal risk or without suitable training. If it is suspected that fumes are still present, the rescuer should wear an appropriate mask or self-contained breathing apparatus. It may be dangerous to the person providing aid to give mouth-to-mouth resuscitation.

See toxicological information (Section 11)

Section 5. Fire-fighting measures

Extinguishing media

Suitable extinguishing media : Use dry chemical, CO_2, water spray (fog) or foam.

Unsuitable extinguishing media : Do not use water jet.

Specific hazards arising from the chemical : Flammable liquid and vapor. In a fire or if heated, a pressure increase will occur and the container may burst, with the risk of a subsequent explosion. Vapors may accumulate in low or confined areas or travel a considerable distance to a source of ignition and flash back. Runoff to sewer may create fire or explosion hazard.

Hazardous thermal decomposition products : Decomposition products may include the following materials:
carbon oxides
halogenated compounds
carbonyl halides

Special protective actions for fire-fighters : Promptly isolate the scene by removing all persons from the vicinity of the incident if there is a fire. No action shall be taken involving any personal risk or without suitable training. Move containers from fire area if this can be done without risk. Use water spray to keep fire-exposed containers cool.

Special protective equipment for fire-fighters : Fire-fighters should wear appropriate protective equipment and self-contained breathing apparatus (SCBA) with a full face-piece operated in positive pressure mode.

Section 6. Accidental release measures

Personal precautions, protective equipment and emergency procedures

For non-emergency personnel : No action shall be taken involving any personal risk or without suitable training. Evacuate surrounding areas. Keep unnecessary and unprotected personnel from entering. Do not touch or walk through spilled material. Shut off all ignition sources. No flares, smoking or flames in hazard area. Avoid breathing vapor or mist. Provide adequate ventilation. Wear appropriate respirator when ventilation is inadequate. Put on appropriate personal protective equipment.

For emergency responders : If specialized clothing is required to deal with the spillage, take note of any information in Section 8 on suitable and unsuitable materials. See also the information in "For non-emergency personnel".

Environmental precautions : Avoid dispersal of spilled material and runoff and contact with soil, waterways, drains and sewers. Inform the relevant authorities if the product has caused environmental pollution (sewers, waterways, soil or air).

Methods and materials for containment and cleaning up

Small spill : Stop leak if without risk. Move containers from spill area. Use spark-proof tools and explosion-proof equipment. Dilute with water and mop up if water-soluble. Alternatively, or if water-insoluble, absorb with an inert dry material and place in an appropriate waste disposal container. Dispose of via a licensed waste disposal contractor.

Section 6. Accidental release measures

Large spill : Stop leak if without risk. Move containers from spill area. Use spark-proof tools and explosion-proof equipment. Approach release from upwind. Prevent entry into sewers, water courses, basements or confined areas. Wash spillages into an effluent treatment plant or proceed as follows. Contain and collect spillage with non-combustible, absorbent material e.g. sand, earth, vermiculite or diatomaceous earth and place in container for disposal according to local regulations (see Section 13). Dispose of via a licensed waste disposal contractor. Contaminated absorbent material may pose the same hazard as the spilled product. Note: see Section 1 for emergency contact information and Section 13 for waste disposal.

Section 7. Handling and storage

Precautions for safe handling

Protective measures : Put on appropriate personal protective equipment (see Section 8). Avoid exposure - obtain special instructions before use. Do not handle until all safety precautions have been read and understood. Do not get in eyes or on skin or clothing. Do not ingest. Avoid breathing vapor or mist. Use only with adequate ventilation. Wear appropriate respirator when ventilation is inadequate. Do not enter storage areas and confined spaces unless adequately ventilated. Keep in the original container or an approved alternative made from a compatible material, kept tightly closed when not in use. Store and use away from heat, sparks, open flame or any other ignition source. Use explosion-proof electrical (ventilating, lighting and material handling) equipment. Use only non-sparking tools. Take precautionary measures against electrostatic discharges. Empty containers retain product residue and can be hazardous. Do not reuse container.

Special precautions : Vapors may accumulate in low or confined areas or travel a considerable distance to a source of ignition and flash back. Vapors are heavier than air and may spread along floors. If this material is part of a multiple component system, read the Safety Data Sheet(s) for the other component or components before blending as the resulting mixture may have the hazards of all of its parts.

Advice on general occupational hygiene : Eating, drinking and smoking should be prohibited in areas where this material is handled, stored and processed. Workers should wash hands and face before eating, drinking and smoking. Remove contaminated clothing and protective equipment before entering eating areas. See also Section 8 for additional information on hygiene measures.

Conditions for safe storage, including any incompatibilities : Do not store above the following temperature: 50°C (122°F). Store in accordance with local regulations. Store in a segregated and approved area. Store in original container protected from direct sunlight in a dry, cool and well-ventilated area, away from incompatible materials (see Section 10) and food and drink. Store locked up. Eliminate all ignition sources. Separate from oxidizing materials. Keep container tightly closed and sealed until ready for use. Containers that have been opened must be carefully resealed and kept upright to prevent leakage. Do not store in unlabeled containers. Use appropriate containment to avoid environmental contamination.

Section 8. Exposure controls/personal protection

Control parameters

Occupational exposure limits

Ingredient name	Exposure limits
4-chloro-α,α,α-trifluorotoluene	**IPEL (PPG).** TWA: 0.57 ppm STEL: 1.71 ppm

Key to abbreviations

A	= Acceptable Maximum Peak	S	= Potential skin absorption
ACGIH	= American Conference of Governmental Industrial Hygienists.	SR	= Respiratory sensitization
C	= Ceiling Limit	SS	= Skin sensitization
F	= Fume	STEL	= Short term Exposure limit values
IPEL	= Internal Permissible Exposure Limit	TD	= Total dust
OSHA	= Occupational Safety and Health Administration.	TLV	= Threshold Limit Value
R	= Respirable	TWA	= Time Weighted Average
Z	= OSHA 29 CFR 1910.1200 Subpart Z - Toxic and Hazardous Substances		

Consult local authorities for acceptable exposure limits.

Recommended monitoring procedures : If this product contains ingredients with exposure limits, personal, workplace atmosphere or biological monitoring may be required to determine the effectiveness of the ventilation or other control measures and/or the necessity to use respiratory protective equipment. Reference should be made to appropriate monitoring standards. Reference to national guidance documents for methods for the determination of hazardous substances will also be required.

Appropriate engineering controls : Use only with adequate ventilation. Use process enclosures, local exhaust ventilation or other engineering controls to keep worker exposure to airborne contaminants below any recommended or statutory limits. The engineering controls also need to keep gas, vapor or dust concentrations below any lower explosive limits. Use explosion-proof ventilation equipment.

Environmental exposure controls : Emissions from ventilation or work process equipment should be checked to ensure they comply with the requirements of environmental protection legislation. In some cases, fume scrubbers, filters or engineering modifications to the process equipment will be necessary to reduce emissions to acceptable levels.

Individual protection measures

Hygiene measures : Wash hands, forearms and face thoroughly after handling chemical products, before eating, smoking and using the lavatory and at the end of the working period. Appropriate techniques should be used to remove potentially contaminated clothing. Wash contaminated clothing before reusing. Ensure that eyewash stations and safety showers are close to the workstation location.

Eye/face protection : Chemical splash goggles.

Skin protection

Hand protection : Chemical-resistant, impervious gloves complying with an approved standard should be worn at all times when handling chemical products if a risk assessment indicates this is necessary. Considering the parameters specified by the glove manufacturer, check during use that the gloves are still retaining their protective properties. It should be noted that the time to breakthrough for any glove material may be different for different glove manufacturers. In the case of mixtures, consisting of several substances, the protection time of the gloves cannot be accurately estimated.

Section 8. Exposure controls/personal protection

Body protection : Personal protective equipment for the body should be selected based on the task being performed and the risks involved and should be approved by a specialist before handling this product. When there is a risk of ignition from static electricity, wear anti-static protective clothing. For the greatest protection from static discharges, clothing should include anti-static overalls, boots and gloves.

Other skin protection : Appropriate footwear and any additional skin protection measures should be selected based on the task being performed and the risks involved and should be approved by a specialist before handling this product.

Respiratory protection : Respirator selection must be based on known or anticipated exposure levels, the hazards of the product and the safe working limits of the selected respirator. If workers are exposed to concentrations above the exposure limit, they must use appropriate, certified respirators. Use a properly fitted, air-purifying or air-fed respirator complying with an approved standard if a risk assessment indicates this is necessary.

Section 9. Physical and chemical properties

Appearance

Physical state : Liquid.

Color : Not available.

Odor : Not available.

Odor threshold : Not available.

pH : Not applicable.

Melting point : Not available.

Boiling point : >37.78°C (>100°F)

Flash point : Closed cup: 42.78°C (109°F)

Auto-ignition temperature : Not available.

Decomposition temperature : Not available.

Flammability (solid, gas) : Not available.

Lower and upper explosive (flammable) limits : Not available.

Evaporation rate : Not available.

Vapor pressure : Not available.

Vapor density : Not available.

Relative density : 1.34

Density (lbs / gal) : 11.18

Bulk Density (g/cm³) : 1.34

Solubility : Insoluble in the following materials: cold water.

Partition coefficient: n-octanol/water : Not available.

Viscosity : Kinematic (40°C (104°F)): <0.14 cm^2/s (<14 cSt)

Volatility : 100% (v/v), 100% (w/w)

% Solid. (w/w) : 0

Section 10. Stability and reactivity

Reactivity : No specific test data related to reactivity available for this product or its ingredients.

Chemical stability : The product is stable.

Possibility of hazardous reactions : Under normal conditions of storage and use, hazardous reactions will not occur.

Conditions to avoid : When exposed to high temperatures may produce hazardous decomposition products. Refer to protective measures listed in sections 7 and 8.

Incompatible materials : Keep away from the following materials to prevent strong exothermic reactions: oxidizing agents, strong alkalis, strong acids.

Hazardous decomposition products : Depending on conditions, decomposition products may include the following materials: carbon oxides halogenated compounds carbonyl halides

Section 11. Toxicological information

Information on toxicological effects

Acute toxicity

Product/ingredient name	Result	Species	Dose	Exposure
4-chloro-α,α,α-trifluorotoluene	LC50 Inhalation Vapor LD50 Dermal LD50 Oral	Rat Rabbit Rat	33080 mg/m³ >2.7 g/kg 13 g/kg	4 hours - -

Conclusion/Summary : There are no data available on the mixture itself.

Irritation/Corrosion

Conclusion/Summary

Skin : There are no data available on the mixture itself.

Eyes : There are no data available on the mixture itself.

Respiratory : There are no data available on the mixture itself.

Sensitization

Conclusion/Summary

Skin : There are no data available on the mixture itself.

Respiratory : There are no data available on the mixture itself.

Mutagenicity

Conclusion/Summary : There are no data available on the mixture itself.

Carcinogenicity

Conclusion/Summary : There are no data available on the mixture itself.

Classification

Product/ingredient name	OSHA	IARC	NTP
4-chloro-α,α,α-trifluorotoluene	-	2B	-

Carcinogen Classification code:

Section 11. Toxicological information

IARC: 1, 2A, 2B, 3, 4
NTP: Known to be a human carcinogen; Reasonably anticipated to be a human carcinogen
OSHA: +
Not listed/not regulated: -

Reproductive toxicity

Conclusion/Summary : There are no data available on the mixture itself.

Teratogenicity

Conclusion/Summary : There are no data available on the mixture itself.

Specific target organ toxicity (single exposure)

Name	Category	Route of exposure	Target organs
4-chloro-α,α,α-trifluorotoluene	Category 3	-	Respiratory tract irritation

Specific target organ toxicity (repeated exposure)

Not available.

Target organs : Contains material which causes damage to the following organs: brain, central nervous system (CNS).
Contains material which may cause damage to the following organs: liver, upper respiratory tract, adrenal.

Aspiration hazard

Not available.

Information on the likely routes of exposure

Potential acute health effects

Eye contact : Causes serious eye irritation.
Inhalation : May cause respiratory irritation.
Skin contact : Causes skin irritation. Defatting to the skin.
Ingestion : No known significant effects or critical hazards.

Over-exposure signs/symptoms

Eye contact : Adverse symptoms may include the following:
pain or irritation
watering
redness

Inhalation : Adverse symptoms may include the following:
respiratory tract irritation
coughing

Skin contact : Adverse symptoms may include the following:
irritation
redness
dryness
cracking

Ingestion : No specific data.

Delayed and immediate effects and also chronic effects from short and long term exposure

Section 11. Toxicological information

Conclusion/Summary : There are no data available on the mixture itself. Exposure to component solvent vapor concentrations in excess of the stated occupational exposure limit may result in adverse health effects such as mucous membrane and respiratory system irritation and adverse effects on the kidneys, liver and central nervous system. Symptoms and signs include headache, dizziness, fatigue, muscular weakness, drowsiness and, in extreme cases, loss of consciousness. Solvents may cause some of the above effects by absorption through the skin. There is some evidence that repeated exposure to organic solvent vapors in combination with constant loud noise can cause greater hearing loss than expected from exposure to noise alone. If splashed in the eyes, the liquid may cause irritation and reversible damage. Ingestion may cause nausea, diarrhea and vomiting. This takes into account, where known, delayed and immediate effects and also chronic effects of components from short-term and long-term exposure by oral, inhalation and dermal routes of exposure and eye contact.

Short term exposure

Potential immediate effects : There are no data available on the mixture itself.

Potential delayed effects : There are no data available on the mixture itself.

Long term exposure

Potential immediate effects : There are no data available on the mixture itself.

Potential delayed effects : There are no data available on the mixture itself.

Potential chronic health effects

General : Prolonged or repeated contact can defat the skin and lead to irritation, cracking and/or dermatitis.

Carcinogenicity : Suspected of causing cancer. Risk of cancer depends on duration and level of exposure.

Mutagenicity : No known significant effects or critical hazards.

Reproductive toxicity : No known significant effects or critical hazards.

Numerical measures of toxicity

Acute toxicity estimates

Product/ingredient name	Oral (mg/kg)	Dermal (mg/kg)	Inhalation (gases) (ppm)	Inhalation (vapors) (mg/l)	Inhalation (dusts and mists) (mg/l)
SLOW COMPLIANT THINNER	N/A	2522.7	N/A	N/A	N/A
4-chloro-α,α,α-trifluorotoluene	13000	2500	N/A	33.08	N/A

Section 12. Ecological information

Toxicity

Not available.

Persistence and degradability

Not available.

Section 12. Ecological information

Bioaccumulative potential

Not available.

Mobility in soil

Soil/water partition coefficient (K_{oc}) : Not available.

Section 13. Disposal considerations

Disposal methods : The generation of waste should be avoided or minimized wherever possible. Disposal of this product, solutions and any by-products should at all times comply with the requirements of environmental protection and waste disposal legislation and any regional local authority requirements. Dispose of surplus and non-recyclable products via a licensed waste disposal contractor. Waste should not be disposed of untreated to the sewer unless fully compliant with the requirements of all authorities with jurisdiction. Waste packaging should be recycled. Incineration or landfill should only be considered when recycling is not feasible. This material and its container must be disposed of in a safe way. Care should be taken when handling emptied containers that have not been cleaned or rinsed out. Empty containers or liners may retain some product residues. Vapor from product residues may create a highly flammable or explosive atmosphere inside the container. Do not cut, weld or grind used containers unless they have been cleaned thoroughly internally. Avoid dispersal of spilled material and runoff and contact with soil, waterways, drains and sewers.

Disposal should be in accordance with applicable regional, national and local laws and regulations.

Refer to Section 7: HANDLING AND STORAGE and Section 8: EXPOSURE CONTROLS/PERSONAL PROTECTION for additional handling information and protection of employees. Section 6. Accidental release measures

14. Transport information

	DOT	IMDG	IATA
UN number	UN1263	UN1263	UN1263
UN proper shipping name	PAINT RELATED MATERIAL	PAINT RELATED MATERIAL	PAINT RELATED MATERIAL
Transport hazard class (es)	3	3	3
Packing group	III	III	III
Environmental hazards	No.	No.	No.
Marine pollutant substances	Not applicable.	Not applicable.	Not applicable.

Additional information

DOT : This product may be re-classified as "Combustible Liquid," unless transported by vessel or aircraft. Non-bulk packages (less than or equal to 119 gal) of combustible liquids are not regulated as hazardous materials.

IMDG : None identified.

14. Transport information

IATA : None identified.

Special precautions for user : **Transport within user's premises:** always transport in closed containers that are upright and secure. Ensure that persons transporting the product know what to do in the event of an accident or spillage.

Transport in bulk according to IMO instruments : Not applicable.

Section 15. Regulatory information

United States

United States inventory (TSCA 8b) : All components are active or exempted.

U.S. Federal regulations :

United States - TSCA 12(b) - Chemical export notification:

4-chloro-α,α,α-trifluorotoluene — One time notification

United States - TSCA 5(a)2 - Final significant new use rules:

4-chloro-α,α,α-trifluorotoluene — Listed — 40 CFR 799.5089

SARA 302/304

SARA 304 RQ : Not applicable.

Composition/information on ingredients

No products were found.

SARA 311/312

Classification : FLAMMABLE LIQUIDS - Category 3
SKIN IRRITATION - Category 2
EYE IRRITATION - Category 2A
CARCINOGENICITY - Category 2
SPECIFIC TARGET ORGAN TOXICITY (SINGLE EXPOSURE) (Respiratory tract irritation) - Category 3
HNOC - Defatting irritant

Composition/information on ingredients

Name	%	Classification
4-chloro-α,α,α-trifluorotoluene	≥90	FLAMMABLE LIQUIDS - Category 3 SKIN IRRITATION - Category 2 EYE IRRITATION - Category 2A CARCINOGENICITY - Category 2 SPECIFIC TARGET ORGAN TOXICITY (SINGLE EXPOSURE) (Respiratory tract irritation) - Category 3 HNOC - Defatting irritant

Additional environmental information is contained on the Environmental Data Sheet for this product, which can be obtained from your PPG representative.

California Prop. 65

⚠ **WARNING**: Cancer - www.P65Warnings.ca.gov.

Section 16. Other information

Hazardous Material Information System (U.S.A.)

Health : 2 * **Flammability** : 2 **Physical hazards** : 0
(*) - Chronic effects

Caution: HMIS® ratings are based on a 0-4 rating scale, with 0 representing minimal hazards or risks, and 4 representing significant hazards or risks. Although HMIS® ratings and the associated label are not required on MSDSs or products leaving a facility under 29 CFR 1910.1200, the preparer may choose to provide them. HMIS® ratings are to be used with a fully implemented HMIS® program. HMIS® is a registered trademark and service mark of the American Coatings Association, Inc.

The customer is responsible for determining the PPE code for this material. For more information on HMIS® Personal Protective Equipment (PPE) codes, consult the HMIS® Implementation Manual.

National Fire Protection Association (U.S.A.)

Health : 2 **Flammability** : 2 **Instability** : 0

Date of previous issue : **7/31/2020**

Organization that prepared the MSDS : EHS

Key to abbreviations : ATE = Acute Toxicity Estimate
BCF = Bioconcentration Factor
GHS = Globally Harmonized System of Classification and Labelling of Chemicals
IATA = International Air Transport Association
IBC = Intermediate Bulk Container
IMDG = International Maritime Dangerous Goods
LogPow = logarithm of the octanol/water partition coefficient
MARPOL = International Convention for the Prevention of Pollution From Ships, 1973 as modified by the Protocol of 1978. ("Marpol" = marine pollution)
N/A = Not available
SGG = Segregation Group
UN = United Nations

◤ **Indicates information that has changed from previously issued version.**

Disclaimer

The information contained in this data sheet is based on present scientific and technical knowledge. The purpose of this information is to draw attention to the health and safety aspects concerning the products supplied by PPG, and to recommend precautionary measures for the storage and handling of the products. No warranty or guarantee is given in respect of the properties of the products. No liability can be accepted for any failure to observe the precautionary measures described in this data sheet or for any misuse of the products.

SAFETY DATA SHEET

Date of issue/Date of revision **1 August 2020**
Version 22

Section 1. Identification

Product name	: A-CHROMATIC SURFACER-GRAY
Product code	: ECP15
Other means of identification	: Not available.
Product type	: Liquid.

Relevant identified uses of the substance or mixture and uses advised against

Product use	: Industrial applications.
Use of the substance/ mixture	: Coating. Paints. Painting-related materials.
Uses advised against	: Not applicable.

Manufacturer	: PPG Industries, Inc. One PPG Place, Pittsburgh, PA 15272
Emergency telephone number	: (412) 434-4515 (U.S.) (514) 645-1320 (Canada) SETIQ Interior de la República: 800-00-214-00 (México) SETIQ Ciudad de México: (55) 5559-1588 (México)
Technical Phone Number	: 1-800-647-6050

Section 2. Hazards identification

OSHA/HCS status	: This material is considered hazardous by the OSHA Hazard Communication Standard (29 CFR 1910.1200).
Classification of the substance or mixture	: FLAMMABLE LIQUIDS - Category 3 SKIN IRRITATION - Category 2 EYE IRRITATION - Category 2A CARCINOGENICITY - Category 2 SPECIFIC TARGET ORGAN TOXICITY (SINGLE EXPOSURE) (Respiratory tract irritation) - Category 3 Percentage of the mixture consisting of ingredient(s) of unknown acute toxicity: 13.1% (Oral), 31.5% (Dermal), 36.1% (Inhalation)

Section 2. Hazards identification

This product contains TiO2 which has been classified as a GHS Carcinogen Category 2 based on its IARC 2B classification. For many PPG products, TiO2 is utilized as a raw material in a liquid coating formulation. In this case, the TiO2 particles are bound in a matrix with no meaningful potential for human exposure to unbound particles of TiO2 when the product is applied with a brush or roller. Sanding the coating surface or mist from spray applications may be harmful depending on the duration and level of exposure and require the use of appropriate personal protective equipment and/or engineering controls (see Section 8).

GHS label elements

Hazard pictograms :

Signal word : Warning

Hazard statements : Flammable liquid and vapor.
Causes skin irritation.
Causes serious eye irritation.
May cause respiratory irritation.
Suspected of causing cancer.

Precautionary statements

Prevention : Obtain special instructions before use. Do not handle until all safety precautions have been read and understood. Wear protective gloves, protective clothing and eye or face protection. Keep away from heat, hot surfaces, sparks, open flames and other ignition sources. No smoking. Use explosion-proof electrical, ventilating or lighting equipment. Use non-sparking tools. Take action to prevent static discharges. Use only outdoors or in a well-ventilated area. Avoid breathing vapor. Wash thoroughly after handling.

Response : If exposed or concerned: Get medical advice or attention. IF INHALED: Remove person to fresh air and keep comfortable for breathing. Call a POISON CENTER or doctor if you feel unwell. IF ON SKIN (or hair): Take off immediately all contaminated clothing. Rinse skin with water. IF ON SKIN: Wash with plenty of water. If skin irritation occurs: Get medical advice or attention. IF IN EYES: Rinse cautiously with water for several minutes. Remove contact lenses, if present and easy to do. Continue rinsing. If eye irritation persists: Get medical advice or attention.

Storage : Store locked up. Store in a well-ventilated place. Keep container tightly closed. Keep cool.

Disposal : Dispose of contents and container in accordance with all local, regional, national and international regulations.

Supplemental label elements : Sanding and grinding dusts may be harmful if inhaled. Repeated exposure to high vapor concentrations may cause irritation of the respiratory system and permanent brain and nervous system damage. Inhalation of vapor/aerosol concentrations above the recommended exposure limits causes headaches, drowsiness and nausea and may lead to unconsciousness or death. Avoid contact with skin and clothing. Wash thoroughly after handling. Emits toxic fumes when heated.

Hazards not otherwise classified : Prolonged or repeated contact may dry skin and cause irritation.

Section 3. Composition/information on ingredients

Substance/mixture : Mixture
Product name : A-CHROMATIC SURFACER-GRAY

Ingredient name	%	CAS number
[redacted]-chloro-α,α,α-trifluorotoluene	≥20 - ≤50	98-56-6
titanium dioxide	≥10 - ≤20	13463-67-7
barium sulfate	≥10 - ≤19	7727-43-7
Talc , not containing asbestiform fibres	≥10 - ≤20	14807-96-6
Kaolin	≥5.0 - ≤10	1332-58-7
xylene	≥1.0 - ≤5.0	1330-20-7
heptan-2-one	≥1.0 - ≤5.0	110-43-0
ethylbenzene	<1.0	100-41-4
carbon black, respirable powder	<1.0	1333-86-4

SUB codes represent substances without registered CAS Numbers.

Any concentration shown as a range is to protect confidentiality or is due to batch variation.

There are no additional ingredients present which, within the current knowledge of the supplier and in the concentrations applicable, are classified as hazardous to health or the environment and hence require reporting in this section.

Occupational exposure limits, if available, are listed in Section 8.

Section 4. First aid measures

If ingestion, irritation, any type of overexposure or symptoms of overexposure occur during or persists after use of this product, contact a POISON CONTROL CENTER, EMERGENCY ROOM OR PHYSICIAN immediately; have Safety Data Sheet information available. Never give anything by mouth to an unconscious or convulsing person.

Description of necessary first aid measures

Eye contact : Remove contact lenses, irrigate copiously with clean, fresh water, holding the eyelids apart for at least 10 minutes and seek immediate medical advice.

Inhalation : Remove to fresh air. Keep person warm and at rest. If not breathing, if breathing is irregular or if respiratory arrest occurs, provide artificial respiration or oxygen by trained personnel.

Skin contact : Remove contaminated clothing and shoes. Wash skin thoroughly with soap and water or use recognized skin cleanser. Do NOT use solvents or thinners.

Ingestion : If swallowed, seek medical advice immediately and show this container or label. Keep person warm and at rest. Do NOT induce vomiting.

Most important symptoms/effects, acute and delayed

Potential acute health effects

Eye contact : Causes serious eye irritation.

Inhalation : May cause respiratory irritation.

Skin contact : Causes skin irritation. Defatting to the skin.

Ingestion : No known significant effects or critical hazards.

Over-exposure signs/symptoms

Eye contact : Adverse symptoms may include the following:
pain or irritation
watering
redness

Section 4. First aid measures

Inhalation : Adverse symptoms may include the following:
respiratory tract irritation
coughing

Skin contact : Adverse symptoms may include the following:
irritation
redness
dryness
cracking

Ingestion : No specific data.

Indication of immediate medical attention and special treatment needed, if necessary

Notes to physician : In case of inhalation of decomposition products in a fire, symptoms may be delayed. The exposed person may need to be kept under medical surveillance for 48 hours.

Specific treatments : No specific treatment.

Protection of first-aiders : No action shall be taken involving any personal risk or without suitable training. If it is suspected that fumes are still present, the rescuer should wear an appropriate mask or self-contained breathing apparatus. It may be dangerous to the person providing aid to give mouth-to-mouth resuscitation.

See toxicological information (Section 11)

Section 5. Fire-fighting measures

Extinguishing media

Suitable extinguishing media : Use dry chemical, CO_2, water spray (fog) or foam.

Unsuitable extinguishing media : Do not use water jet.

Specific hazards arising from the chemical : Flammable liquid and vapor. In a fire or if heated, a pressure increase will occur and the container may burst, with the risk of a subsequent explosion. Runoff to sewer may create fire or explosion hazard.

Hazardous thermal decomposition products : Decomposition products may include the following materials:
carbon oxides
sulfur oxides
halogenated compounds
carbonyl halides
metal oxide/oxides

Special protective actions for fire-fighters : Promptly isolate the scene by removing all persons from the vicinity of the incident if there is a fire. No action shall be taken involving any personal risk or without suitable training. Move containers from fire area if this can be done without risk. Use water spray to keep fire-exposed containers cool.

Special protective equipment for fire-fighters : Fire-fighters should wear appropriate protective equipment and self-contained breathing apparatus (SCBA) with a full face-piece operated in positive pressure mode.

Section 6. Accidental release measures

Personal precautions, protective equipment and emergency procedures

For non-emergency personnel : No action shall be taken involving any personal risk or without suitable training. Evacuate surrounding areas. Keep unnecessary and unprotected personnel from entering. Do not touch or walk through spilled material. Shut off all ignition sources. No flares, smoking or flames in hazard area. Avoid breathing vapor or mist. Provide adequate ventilation. Wear appropriate respirator when ventilation is inadequate. Put on appropriate personal protective equipment.

For emergency responders : If specialized clothing is required to deal with the spillage, take note of any information in Section 8 on suitable and unsuitable materials. See also the information in "For non-emergency personnel".

Environmental precautions : Avoid dispersal of spilled material and runoff and contact with soil, waterways, drains and sewers. Inform the relevant authorities if the product has caused environmental pollution (sewers, waterways, soil or air).

Methods and materials for containment and cleaning up

Small spill : Stop leak if without risk. Move containers from spill area. Use spark-proof tools and explosion-proof equipment. Dilute with water and mop up if water-soluble. Alternatively, or if water-insoluble, absorb with an inert dry material and place in an appropriate waste disposal container. Dispose of via a licensed waste disposal contractor.

Large spill : Stop leak if without risk. Move containers from spill area. Use spark-proof tools and explosion-proof equipment. Approach release from upwind. Prevent entry into sewers, water courses, basements or confined areas. Wash spillages into an effluent treatment plant or proceed as follows. Contain and collect spillage with non-combustible, absorbent material e.g. sand, earth, vermiculite or diatomaceous earth and place in container for disposal according to local regulations (see Section 13). Dispose of via a licensed waste disposal contractor. Contaminated absorbent material may pose the same hazard as the spilled product. Note: see Section 1 for emergency contact information and Section 13 for waste disposal.

Section 7. Handling and storage

Precautions for safe handling

Protective measures : Put on appropriate personal protective equipment (see Section 8). Avoid exposure - obtain special instructions before use. Do not handle until all safety precautions have been read and understood. Do not get in eyes or on skin or clothing. Do not ingest. Avoid breathing vapor or mist. Use only with adequate ventilation. Wear appropriate respirator when ventilation is inadequate. Do not enter storage areas and confined spaces unless adequately ventilated. Keep in the original container or an approved alternative made from a compatible material, kept tightly closed when not in use. Store and use away from heat, sparks, open flame or any other ignition source. Use explosion-proof electrical (ventilating, lighting and material handling) equipment. Use only non-sparking tools. Take precautionary measures against electrostatic discharges. Empty containers retain product residue and can be hazardous. Do not reuse container.

Special precautions : If this material is part of a multiple component system, read the Safety Data Sheet(s) for the other component or components before blending as the resulting mixture may have the hazards of all of its parts.

Section 7. Handling and storage

Advice on general occupational hygiene : Eating, drinking and smoking should be prohibited in areas where this material is handled, stored and processed. Workers should wash hands and face before eating, drinking and smoking. Remove contaminated clothing and protective equipment before entering eating areas. See also Section 8 for additional information on hygiene measures.

Conditions for safe storage, including any incompatibilities : Do not store below the following temperature: 5°C (41°F). Store in accordance with local regulations. Store in a segregated and approved area. Store in original container protected from direct sunlight in a dry, cool and well-ventilated area, away from incompatible materials (see Section 10) and food and drink. Store locked up. Eliminate all ignition sources. Separate from oxidizing materials. Keep container tightly closed and sealed until ready for use. Containers that have been opened must be carefully resealed and kept upright to prevent leakage. Do not store in unlabeled containers. Use appropriate containment to avoid environmental contamination.

Section 8. Exposure controls/personal protection

Control parameters

Occupational exposure limits

Ingredient name	Exposure limits
[redacted]-chloro-α,α,α-trifluorotoluene	**IPEL (PPG).** TWA: 0.57 ppm STEL: 1.71 ppm
titanium dioxide	**OSHA PEL (United States, 5/2018).** TWA: 15 mg/m³ 8 hours. Form: Total dust **ACGIH TLV (United States, 3/2019).** TWA: 10 mg/m³ 8 hours.
barium sulfate	**ACGIH TLV (United States, 3/2019).** TWA: 5 mg/m³ 8 hours. Form: Inhalable fraction **OSHA PEL (United States, 5/2018).** TWA: 5 mg/m³ 8 hours. Form: Respirable fraction TWA: 15 mg/m³ 8 hours. Form: Total dust
Talc , not containing asbestiform fibres	**ACGIH TLV (United States, 3/2019).** TWA: 2 mg/m³ 8 hours. Form: Respirable **OSHA PEL Z3 (United States).** TWA: 2 mg/m³
Kaolin	**ACGIH TLV (United States, 3/2019).** TWA: 2 mg/m³ 8 hours. Form: Respirable fraction **OSHA PEL (United States, 5/2018).** TWA: 5 mg/m³ 8 hours. Form: Respirable fraction TWA: 15 mg/m³ 8 hours. Form: Total dust
xylene	**ACGIH TLV (United States, 3/2019).** STEL: 651 mg/m³ 15 minutes. STEL: 150 ppm 15 minutes. TWA: 434 mg/m³ 8 hours. TWA: 100 ppm 8 hours. **OSHA PEL (United States, 5/2018).**

Section 8. Exposure controls/personal protection

	TWA: 435 mg/m³ 8 hours. TWA: 100 ppm 8 hours.
heptan-2-one	**ACGIH TLV (United States, 3/2019).** TWA: 233 mg/m³ 8 hours. TWA: 50 ppm 8 hours. **OSHA PEL (United States, 5/2018).** TWA: 465 mg/m³ 8 hours. TWA: 100 ppm 8 hours.
ethylbenzene	**ACGIH TLV (United States, 3/2019).** TWA: 20 ppm 8 hours. **OSHA PEL (United States, 5/2018).** TWA: 435 mg/m³ 8 hours. TWA: 100 ppm 8 hours.
carbon black, respirable powder	**ACGIH TLV (United States, 3/2019).** TWA: 3 mg/m³ 8 hours. Form: Inhalable fraction **OSHA PEL (United States, 5/2018).** TWA: 3.5 mg/m³ 8 hours.

Key to abbreviations

A	= Acceptable Maximum Peak	S	= Potential skin absorption
ACGIH	= American Conference of Governmental Industrial Hygienists.	SR	= Respiratory sensitization
C	= Ceiling Limit	SS	= Skin sensitization
F	= Fume	STEL	= Short term Exposure limit values
IPEL	= Internal Permissible Exposure Limit	TD	= Total dust
OSHA	= Occupational Safety and Health Administration.	TLV	= Threshold Limit Value
R	= Respirable	TWA	= Time Weighted Average
Z	= OSHA 29 CFR 1910.1200 Subpart Z - Toxic and Hazardous Substances		

Consult local authorities for acceptable exposure limits.

Recommended monitoring procedures : If this product contains ingredients with exposure limits, personal, workplace atmosphere or biological monitoring may be required to determine the effectiveness of the ventilation or other control measures and/or the necessity to use respiratory protective equipment. Reference should be made to appropriate monitoring standards. Reference to national guidance documents for methods for the determination of hazardous substances will also be required.

Appropriate engineering controls : Use only with adequate ventilation. Use process enclosures, local exhaust ventilation or other engineering controls to keep worker exposure to airborne contaminants below any recommended or statutory limits. The engineering controls also need to keep gas, vapor or dust concentrations below any lower explosive limits. Use explosion-proof ventilation equipment.

Environmental exposure controls : Emissions from ventilation or work process equipment should be checked to ensure they comply with the requirements of environmental protection legislation. In some cases, fume scrubbers, filters or engineering modifications to the process equipment will be necessary to reduce emissions to acceptable levels.

Individual protection measures

Hygiene measures : Wash hands, forearms and face thoroughly after handling chemical products, before eating, smoking and using the lavatory and at the end of the working period. Appropriate techniques should be used to remove potentially contaminated clothing. Wash contaminated clothing before reusing. Ensure that eyewash stations and safety showers are close to the workstation location.

Section 8. Exposure controls/personal protection

Eye/face protection : Chemical splash goggles.

Skin protection

Hand protection : Chemical-resistant, impervious gloves complying with an approved standard should be worn at all times when handling chemical products if a risk assessment indicates this is necessary. Considering the parameters specified by the glove manufacturer, check during use that the gloves are still retaining their protective properties. It should be noted that the time to breakthrough for any glove material may be different for different glove manufacturers. In the case of mixtures, consisting of several substances, the protection time of the gloves cannot be accurately estimated.

Gloves : For prolonged or repeated handling, use the following type of gloves:

Recommended: neoprene, natural rubber (latex), polyvinyl alcohol (PVA), Viton®
Not recommended: nitrile rubber

Body protection : Personal protective equipment for the body should be selected based on the task being performed and the risks involved and should be approved by a specialist before handling this product. When there is a risk of ignition from static electricity, wear anti-static protective clothing. For the greatest protection from static discharges, clothing should include anti-static overalls, boots and gloves.

Other skin protection : Appropriate footwear and any additional skin protection measures should be selected based on the task being performed and the risks involved and should be approved by a specialist before handling this product.

Respiratory protection : Respirator selection must be based on known or anticipated exposure levels, the hazards of the product and the safe working limits of the selected respirator. If workers are exposed to concentrations above the exposure limit, they must use appropriate, certified respirators. Use a properly fitted, air-purifying or air-fed respirator complying with an approved standard if a risk assessment indicates this is necessary.

Section 9. Physical and chemical properties

Appearance

Physical state : Liquid.

Color : Not available.

Odor : Not available.

Odor threshold : Not available.

pH : Not available.

Melting point : Not available.

Boiling point : >37.78°C (>100°F)

Flash point : Closed cup: 26.67°C (80°F)

Auto-ignition temperature : Not available.

Decomposition temperature : Not available.

Flammability (solid, gas) : Not available.

Lower and upper explosive (flammable) limits : Not available.

Evaporation rate : Not available.

Vapor pressure : Not available.

Vapor density : Not available.

Section 9. Physical and chemical properties

Relative density : 1.63

Density (lbs / gal) : 13.6

Solubility : Insoluble in the following materials: cold water.

Partition coefficient: n-octanol/water : Not available.

Viscosity : Kinematic (40°C (104°F)): >0.21 cm^2/s (>21 cSt)

Volatility : 59% (v/v), 42.611% (w/w)

% Solid. (w/w) : 57.389

Section 10. Stability and reactivity

Reactivity : No specific test data related to reactivity available for this product or its ingredients.

Chemical stability : The product is stable.

Possibility of hazardous reactions : Under normal conditions of storage and use, hazardous reactions will not occur.

Conditions to avoid : When exposed to high temperatures may produce hazardous decomposition products. Refer to protective measures listed in sections 7 and 8.

Incompatible materials : Keep away from the following materials to prevent strong exothermic reactions: oxidizing agents, strong alkalis, strong acids.

Hazardous decomposition products : Decomposition products may include the following materials: carbon monoxide, carbon dioxide, smoke, oxides of nitrogen.

Section 11. Toxicological information

Information on toxicological effects

Acute toxicity

Product/ingredient name	Result	Species	Dose	Exposure
[illegible]-chloro-α,α,α-trifluorotoluene	LC50 Inhalation Vapor	Rat	33080 mg/m³	4 hours
	LD50 Dermal	Rabbit	>2.7 g/kg	-
	LD50 Oral	Rat	13 g/kg	-
titanium dioxide	LC50 Inhalation Dusts and mists	Rat	>6.82 mg/l	4 hours
	LD50 Dermal	Rabbit	>5000 mg/kg	-
	LD50 Oral	Rat	>5000 mg/kg	-
barium sulfate	LD50 Dermal	Rat	>2000 mg/kg	-
	LD50 Oral	Rat	>5000 mg/kg	-
Kaolin	LC50 Inhalation Dusts and mists	Rat	>5.07 mg/l	4 hours
	LD50 Oral	Rat	>5000 mg/kg	-
xylene	LD50 Dermal	Rabbit	1.7 g/kg	-
	LD50 Oral	Rat	4.3 g/kg	-
heptan-2-one	LC50 Inhalation Vapor	Rat	16.7 mg/l	4 hours
	LD50 Dermal	Rabbit	10.206 g/kg	-
	LD50 Oral	Rat	1.6 g/kg	-

Section 11. Toxicological information

ethylbenzene	LC50 Inhalation Vapor	Rat	17.8 mg/l	4 hours
	LD50 Dermal	Rabbit	17.8 g/kg	-
	LD50 Oral	Rat	3.5 g/kg	-
carbon black, respirable powder	LD50 Dermal	Rabbit	>3 g/kg	-
	LD50 Oral	Rat	>15400 mg/kg	-

Conclusion/Summary : There are no data available on the mixture itself.

Irritation/Corrosion

Product/ingredient name	Result	Species	Score	Exposure	Observation
xylene	Skin - Moderate irritant	Rabbit	-	24 hours 500 mg	-

Conclusion/Summary

Skin : There are no data available on the mixture itself.

Eyes : There are no data available on the mixture itself.

Respiratory : There are no data available on the mixture itself.

Sensitization

Conclusion/Summary

Skin : There are no data available on the mixture itself.

Respiratory : There are no data available on the mixture itself.

Mutagenicity

Conclusion/Summary : There are no data available on the mixture itself.

Carcinogenicity

Conclusion/Summary : There are no data available on the mixture itself.

Classification

Product/ingredient name	OSHA	IARC	NTP
4-chloro-α,α,α-trifluorotoluene	-	2B	-
titanium dioxide	-	2B	-
xylene	-	3	-
ethylbenzene	-	2B	-
carbon black, respirable powder	-	2B	-

Carcinogen Classification code:

IARC: 1, 2A, 2B, 3, 4
NTP: Known to be a human carcinogen; Reasonably anticipated to be a human carcinogen
OSHA: +
Not listed/not regulated: -

Reproductive toxicity

Conclusion/Summary : There are no data available on the mixture itself.

Teratogenicity

Conclusion/Summary : There are no data available on the mixture itself.

Specific target organ toxicity (single exposure)

Section 11. Toxicological information

Name	Category	Route of exposure	Target organs
4-chloro-α,α,α-trifluorotoluene	Category 3	-	Respiratory tract irritation
Talc , not containing asbestiform fibres	Category 3	-	Respiratory tract irritation
xylene	Category 3	-	Respiratory tract irritation
heptan-2-one	Category 3	-	Narcotic effects

Specific target organ toxicity (repeated exposure)

Name	Category	Route of exposure	Target organs
ethylbenzene	Category 2	-	hearing organs

Target organs : Contains material which causes damage to the following organs: brain, central nervous system (CNS).
Contains material which may cause damage to the following organs: kidneys, lungs, the nervous system, liver, peripheral nervous system, cardiovascular system, upper respiratory tract, skin, adrenal, eye, lens or cornea, stomach.

Aspiration hazard

Name	Result
xylene	ASPIRATION HAZARD - Category 1
ethylbenzene	ASPIRATION HAZARD - Category 1

Information on the likely routes of exposure

Potential acute health effects

Eye contact : Causes serious eye irritation.
Inhalation : May cause respiratory irritation.
Skin contact : Causes skin irritation. Defatting to the skin.
Ingestion : No known significant effects or critical hazards.

Over-exposure signs/symptoms

Eye contact : Adverse symptoms may include the following:
pain or irritation
watering
redness

Inhalation : Adverse symptoms may include the following:
respiratory tract irritation
coughing

Skin contact : Adverse symptoms may include the following:
irritation
redness
dryness
cracking

Ingestion : No specific data.

Delayed and immediate effects and also chronic effects from short and long term exposure

Section 11. Toxicological information

Conclusion/Summary : There are no data available on the mixture itself. This product contains TiO2 which has been classified as a GHS Carcinogen Category 2 based on its IARC 2B classification. For many PPG products, TiO2 is utilized as a raw material in a liquid coating formulation. In this case, the TiO2 particles are bound in a matrix with no meaningful potential for human exposure to unbound particles of TiO2 when the product is applied with a brush or roller. Sanding the coating surface or mist from spray applications may be harmful depending on the duration and level of exposure and require the use of appropriate personal protective equipment and/or engineering controls (see Section 8). Exposure to component solvent vapor concentrations in excess of the stated occupational exposure limit may result in adverse health effects such as mucous membrane and respiratory system irritation and adverse effects on the kidneys, liver and central nervous system. Symptoms and signs include headache, dizziness, fatigue, muscular weakness, drowsiness and, in extreme cases, loss of consciousness. Solvents may cause some of the above effects by absorption through the skin. There is some evidence that repeated exposure to organic solvent vapors in combination with constant loud noise can cause greater hearing loss than expected from exposure to noise alone. If splashed in the eyes, the liquid may cause irritation and reversible damage. Ingestion may cause nausea, diarrhea and vomiting. This takes into account, where known, delayed and immediate effects and also chronic effects of components from short-term and long-term exposure by oral, inhalation and dermal routes of exposure and eye contact.

Short term exposure

Potential immediate effects : There are no data available on the mixture itself.

Potential delayed effects : There are no data available on the mixture itself.

Long term exposure

Potential immediate effects : There are no data available on the mixture itself.

Potential delayed effects : There are no data available on the mixture itself.

Potential chronic health effects

General : Prolonged or repeated contact can defat the skin and lead to irritation, cracking and/or dermatitis.

Carcinogenicity : Suspected of causing cancer. Risk of cancer depends on duration and level of exposure.

Mutagenicity : No known significant effects or critical hazards.

Reproductive toxicity : No known significant effects or critical hazards.

Numerical measures of toxicity

Acute toxicity estimates

Product/ingredient name	Oral (mg/kg)	Dermal (mg/kg)	Inhalation (gases) (ppm)	Inhalation (vapors) (mg/l)	Inhalation (dusts and mists) (mg/l)

Section 11. Toxicological information

A-CHROMATIC SURFACER-GRAY	22815.6	3359.3	N/A	92.4	10.6
4-chloro-α,α,α-trifluorotoluene	13000	2500	N/A	33.08	N/A
barium sulfate	N/A	2500	N/A	N/A	N/A
xylene	4300	1700	N/A	11	1.5
heptan-2-one	1600	10206	N/A	16.7	1.5
ethylbenzene	3500	17800	N/A	17.8	1.5
carbon black, respirable powder	N/A	2500	N/A	N/A	N/A

Section 12. Ecological information

Toxicity

Product/ingredient name	Result	Species	Exposure
titanium dioxide	Acute LC50 >100 mg/l Fresh water	Daphnia - Daphnia magna	48 hours
heptan-2-one	Acute LC50 131 mg/l	Fish	96 hours
ethylbenzene	Acute LC50 150 to 200 mg/l Fresh water	Fish	96 hours

Persistence and degradability

Product/ingredient name	Test	Result	Dose	Inoculum
heptan-2-one	OECD 310	69 % - Readily - 28 days	-	-

Product/ingredient name	Aquatic half-life	Photolysis	Biodegradability
xylene	-	-	Readily
heptan-2-one	-	-	Readily
ethylbenzene	-	-	Readily

Bioaccumulative potential

Product/ingredient name	$LogP_{ow}$	BCF	Potential
xylene	3.16	7.4 to 18.5	low
heptan-2-one	1.98	-	low
ethylbenzene	3.15	79.43	low

Mobility in soil

Soil/water partition coefficient (K_{oc}) : Not available.

Section 13. Disposal considerations

Disposal methods : The generation of waste should be avoided or minimized wherever possible. Disposal of this product, solutions and any by-products should at all times comply with the requirements of environmental protection and waste disposal legislation and any regional local authority requirements. Dispose of surplus and non-recyclable products via a licensed waste disposal contractor. Waste should not be disposed of untreated to the sewer unless fully compliant with the requirements of all authorities with jurisdiction. Waste packaging should be recycled. Incineration or landfill should only be considered

Section 13. Disposal considerations

when recycling is not feasible. This material and its container must be disposed of in a safe way. Care should be taken when handling emptied containers that have not been cleaned or rinsed out. Empty containers or liners may retain some product residues. Vapor from product residues may create a highly flammable or explosive atmosphere inside the container. Do not cut, weld or grind used containers unless they have been cleaned thoroughly internally. Avoid dispersal of spilled material and runoff and contact with soil, waterways, drains and sewers.

Disposal should be in accordance with applicable regional, national and local laws and regulations.

Refer to Section 7: HANDLING AND STORAGE and Section 8: EXPOSURE CONTROLS/PERSONAL PROTECTION for additional handling information and protection of employees. Section 6. Accidental release measures

14. Transport information

	DOT	IMDG	IATA
UN number	UN1263	UN1263	UN1263
UN proper shipping name	PAINT	PAINT	PAINT
Transport hazard class (es)	3	3	3
Packing group	III	III	III
Environmental hazards	No.	No.	No.
Marine pollutant substances	Not applicable.	Not applicable.	Not applicable.
Product RQ (lbs)	2100	Not applicable.	Not applicable.
RQ substances	(xylene)	Not applicable.	Not applicable.

Additional information

DOT : Package sizes shipped in quantities less than the product reportable quantity are not subject to the RQ (reportable quantity) transportation requirements.

IMDG : None identified.

IATA : None identified.

Special precautions for user : **Transport within user's premises:** always transport in closed containers that are upright and secure. Ensure that persons transporting the product know what to do in the event of an accident or spillage.

Transport in bulk according to IMO instruments : Not applicable.

Section 15. Regulatory information

United States

United States inventory (TSCA 8b) : All components are active or exempted.

U.S. Federal regulations :

United States - TSCA 12(b) - Chemical export notification:

4-chloro-α,α,α-trifluorotoluene	One time notification	

United States - TSCA 5(a)2 - Final significant new use rules:

4-chloro-α,α,α-trifluorotoluene	Listed	40 CFR 799.5089

SARA 302/304

SARA 304 RQ : Not applicable.

Composition/information on ingredients

No products were found.

SARA 311/312

Classification : FLAMMABLE LIQUIDS - Category 3
SKIN IRRITATION - Category 2
EYE IRRITATION - Category 2A
CARCINOGENICITY - Category 2
SPECIFIC TARGET ORGAN TOXICITY (SINGLE EXPOSURE) (Respiratory tract irritation) - Category 3
HNOC - Defatting irritant

Composition/information on ingredients

Name	%	Classification
4-chloro-α,α,α-trifluorotoluene	≥20 - ≤50	FLAMMABLE LIQUIDS - Category 3 SKIN IRRITATION - Category 2 EYE IRRITATION - Category 2A CARCINOGENICITY - Category 2 SPECIFIC TARGET ORGAN TOXICITY (SINGLE EXPOSURE) (Respiratory tract irritation) - Category 3 HNOC - Defatting irritant
titanium dioxide	≥10 - ≤20	CARCINOGENICITY - Category 2
Talc , not containing asbestiform fibres	≥10 - ≤20	SPECIFIC TARGET ORGAN TOXICITY (SINGLE EXPOSURE) (Respiratory tract irritation) - Category 3
xylene	≥1.0 - ≤5.0	FLAMMABLE LIQUIDS - Category 3 ACUTE TOXICITY (dermal) - Category 4 ACUTE TOXICITY (inhalation) - Category 4 SKIN IRRITATION - Category 2 EYE IRRITATION - Category 2A SPECIFIC TARGET ORGAN TOXICITY (SINGLE EXPOSURE) (Respiratory tract irritation) - Category 3 ASPIRATION HAZARD - Category 1
heptan-2-one	≥1.0 - ≤5.0	FLAMMABLE LIQUIDS - Category 3 ACUTE TOXICITY (oral) - Category 4 ACUTE TOXICITY (inhalation) - Category 4 SPECIFIC TARGET ORGAN TOXICITY (SINGLE EXPOSURE) (Narcotic effects) - Category 3 HNOC - Defatting irritant
ethylbenzene	<1.0	FLAMMABLE LIQUIDS - Category 2 ACUTE TOXICITY (inhalation) - Category 4

Section 15. Regulatory information

carbon black, respirable powder	<1.0	CARCINOGENICITY - Category 2 SPECIFIC TARGET ORGAN TOXICITY (REPEATED EXPOSURE) - Category 2 ASPIRATION HAZARD - Category 1 HNOC - Defatting irritant COMBUSTIBLE DUSTS CARCINOGENICITY - Category 2

SARA 313

		Chemical name	CAS number	Concentration
Supplier notification	:	xylene	1330-20-7	1 - 5
		ethylbenzene	100-41-4	0.1 - 1

SARA 313 notifications must not be detached from the SDS and any copying and redistribution of the SDS shall include copying and redistribution of the notice attached to copies of the SDS subsequently redistributed.

Additional environmental information is contained on the Environmental Data Sheet for this product, which can be obtained from your PPG representative.

California Prop. 65

⚠ **WARNING**: Cancer - www.P65Warnings.ca.gov.

Section 16. Other information

Hazardous Material Information System (U.S.A.)

Health : 2 * **Flammability** : 3 **Physical hazards** : 0

(*) - Chronic effects

Caution: HMIS® ratings are based on a 0-4 rating scale, with 0 representing minimal hazards or risks, and 4 representing significant hazards or risks. Although HMIS® ratings and the associated label are not required on MSDSs or products leaving a facility under 29 CFR 1910.1200, the preparer may choose to provide them. HMIS® ratings are to be used with a fully implemented HMIS® program. HMIS® is a registered trademark and service mark of the American Coatings Association, Inc.

The customer is responsible for determining the PPE code for this material. For more information on HMIS® Personal Protective Equipment (PPE) codes, consult the HMIS® Implementation Manual.

National Fire Protection Association (U.S.A.)

Health : 2 **Flammability** : 3 **Instability** : 0

Date of previous issue : **6/14/2020**

Organization that prepared the MSDS : EHS

Key to abbreviations : ATE = Acute Toxicity Estimate
BCF = Bioconcentration Factor
GHS = Globally Harmonized System of Classification and Labelling of Chemicals
IATA = International Air Transport Association
IBC = Intermediate Bulk Container
IMDG = International Maritime Dangerous Goods
LogPow = logarithm of the octanol/water partition coefficient
MARPOL = International Convention for the Prevention of Pollution From Ships, 1973 as modified by the Protocol of 1978. ("Marpol" = marine pollution)
N/A = Not available
SGG = Segregation Group
UN = United Nations

◤ **Indicates information that has changed from previously issued version.**

Section 16. Other information

Disclaimer

The information contained in this data sheet is based on present scientific and technical knowledge. The purpose of this information is to draw attention to the health and safety aspects concerning the products supplied by PPG, and to recommend precautionary measures for the storage and handling of the products. No warranty or guarantee is given in respect of the properties of the products. No liability can be accepted for any failure to observe the precautionary measures described in this data sheet or for any misuse of the products.

SAFETY DATA SHEET

Date of issue/Date of revision **1 August 2020**
Version 17

Section 1. Identification

Product name	: A-CHROMATIC SURFACER- WHITE
Product code	: ECP11
Other means of identification	: Not available.
Product type	: Liquid.

Relevant identified uses of the substance or mixture and uses advised against

Product use	: Industrial applications.
Use of the substance/ mixture	: Coating. Paints. Painting-related materials.
Uses advised against	: Not applicable.

Manufacturer	: PPG Industries, Inc. One PPG Place, Pittsburgh, PA 15272
Emergency telephone number	: (412) 434-4515 (U.S.) (514) 645-1320 (Canada) SETIQ Interior de la República: 800-00-214-00 (México) SETIQ Ciudad de México: (55) 5559-1588 (México)
Technical Phone Number	: 1-800-647-6050

Section 2. Hazards identification

OSHA/HCS status	: This material is considered hazardous by the OSHA Hazard Communication Standard (29 CFR 1910.1200).
Classification of the substance or mixture	: FLAMMABLE LIQUIDS - Category 3 SKIN IRRITATION - Category 2 EYE IRRITATION - Category 2A CARCINOGENICITY - Category 2 SPECIFIC TARGET ORGAN TOXICITY (SINGLE EXPOSURE) (Respiratory tract irritation) - Category 3 Percentage of the mixture consisting of ingredient(s) of unknown acute toxicity: 13.5% (Oral), 28.2% (Dermal), 39.2% (Inhalation)

Section 2. Hazards identification

This product contains TiO2 which has been classified as a GHS Carcinogen Category 2 based on its IARC 2B classification. For many PPG products, TiO2 is utilized as a raw material in a liquid coating formulation. In this case, the TiO2 particles are bound in a matrix with no meaningful potential for human exposure to unbound particles of TiO2 when the product is applied with a brush or roller. Sanding the coating surface or mist from spray applications may be harmful depending on the duration and level of exposure and require the use of appropriate personal protective equipment and/or engineering controls (see Section 8).

GHS label elements

Hazard pictograms :

Signal word : Warning

Hazard statements : Flammable liquid and vapor.
Causes skin irritation.
Causes serious eye irritation.
May cause respiratory irritation.
Suspected of causing cancer.

Precautionary statements

Prevention : Obtain special instructions before use. Do not handle until all safety precautions have been read and understood. Wear protective gloves, protective clothing and eye or face protection. Keep away from heat, hot surfaces, sparks, open flames and other ignition sources. No smoking. Use explosion-proof electrical, ventilating or lighting equipment. Use non-sparking tools. Take action to prevent static discharges. Use only outdoors or in a well-ventilated area. Avoid breathing vapor. Wash thoroughly after handling.

Response : If exposed or concerned: Get medical advice or attention. IF INHALED: Remove person to fresh air and keep comfortable for breathing. Call a POISON CENTER or doctor if you feel unwell. IF ON SKIN (or hair): Take off immediately all contaminated clothing. Rinse skin with water. IF ON SKIN: Wash with plenty of water. If skin irritation occurs: Get medical advice or attention. IF IN EYES: Rinse cautiously with water for several minutes. Remove contact lenses, if present and easy to do. Continue rinsing. If eye irritation persists: Get medical advice or attention.

Storage : Store locked up. Store in a well-ventilated place. Keep container tightly closed. Keep cool.

Disposal : Dispose of contents and container in accordance with all local, regional, national and international regulations.

Supplemental label elements : Sanding and grinding dusts may be harmful if inhaled. Repeated exposure to high vapor concentrations may cause irritation of the respiratory system and permanent brain and nervous system damage. Inhalation of vapor/aerosol concentrations above the recommended exposure limits causes headaches, drowsiness and nausea and may lead to unconsciousness or death. Avoid contact with skin and clothing. Wash thoroughly after handling. Emits toxic fumes when heated.

Hazards not otherwise classified : Prolonged or repeated contact may dry skin and cause irritation.

Section 3. Composition/information on ingredients

Substance/mixture : Mixture
Product name : A-CHROMATIC SURFACER- WHITE

Ingredient name	%	CAS number
4-chloro-α,α,α-trifluorotoluene	≥20 - ≤50	98-56-6
Talc , not containing asbestiform fibres	≥10 - ≤20	14807-96-6
titanium dioxide	≥10 - ≤20	13463-67-7
barium sulfate	≥10 - ≤19	7727-43-7
xylene	≥1.0 - ≤5.0	1330-20-7
heptan-2-one	≥1.0 - ≤5.0	110-43-0
ethylbenzene	<1.0	100-41-4

SUB codes represent substances without registered CAS Numbers.

Any concentration shown as a range is to protect confidentiality or is due to batch variation.

There are no additional ingredients present which, within the current knowledge of the supplier and in the concentrations applicable, are classified as hazardous to health or the environment and hence require reporting in this section.

Occupational exposure limits, if available, are listed in Section 8.

Section 4. First aid measures

If ingestion, irritation, any type of overexposure or symptoms of overexposure occur during or persists after use of this product, contact a POISON CONTROL CENTER, EMERGENCY ROOM OR PHYSICIAN immediately; have Safety Data Sheet information available. Never give anything by mouth to an unconscious or convulsing person.

Description of necessary first aid measures

Eye contact : Remove contact lenses, irrigate copiously with clean, fresh water, holding the eyelids apart for at least 10 minutes and seek immediate medical advice.

Inhalation : Remove to fresh air. Keep person warm and at rest. If not breathing, if breathing is irregular or if respiratory arrest occurs, provide artificial respiration or oxygen by trained personnel.

Skin contact : Remove contaminated clothing and shoes. Wash skin thoroughly with soap and water or use recognized skin cleanser. Do NOT use solvents or thinners.

Ingestion : If swallowed, seek medical advice immediately and show this container or label. Keep person warm and at rest. Do NOT induce vomiting.

Most important symptoms/effects, acute and delayed

Potential acute health effects

Eye contact : Causes serious eye irritation.

Inhalation : May cause respiratory irritation.

Skin contact : Causes skin irritation. Defatting to the skin.

Ingestion : No known significant effects or critical hazards.

Over-exposure signs/symptoms

Eye contact : Adverse symptoms may include the following:
pain or irritation
watering
redness

Section 4. First aid measures

Inhalation : Adverse symptoms may include the following:
respiratory tract irritation
coughing

Skin contact : Adverse symptoms may include the following:
irritation
redness
dryness
cracking

Ingestion : No specific data.

Indication of immediate medical attention and special treatment needed, if necessary

Notes to physician : In case of inhalation of decomposition products in a fire, symptoms may be delayed. The exposed person may need to be kept under medical surveillance for 48 hours.

Specific treatments : No specific treatment.

Protection of first-aiders : No action shall be taken involving any personal risk or without suitable training. If it is suspected that fumes are still present, the rescuer should wear an appropriate mask or self-contained breathing apparatus. It may be dangerous to the person providing aid to give mouth-to-mouth resuscitation.

See toxicological information (Section 11)

Section 5. Fire-fighting measures

Extinguishing media

Suitable extinguishing media : Use dry chemical, CO_2, water spray (fog) or foam.

Unsuitable extinguishing media : Do not use water jet.

Specific hazards arising from the chemical : Flammable liquid and vapor. In a fire or if heated, a pressure increase will occur and the container may burst, with the risk of a subsequent explosion. Runoff to sewer may create fire or explosion hazard.

Hazardous thermal decomposition products : Decomposition products may include the following materials:
carbon oxides
sulfur oxides
halogenated compounds
carbonyl halides
metal oxide/oxides

Special protective actions for fire-fighters : Promptly isolate the scene by removing all persons from the vicinity of the incident if there is a fire. No action shall be taken involving any personal risk or without suitable training. Move containers from fire area if this can be done without risk. Use water spray to keep fire-exposed containers cool.

Special protective equipment for fire-fighters : Fire-fighters should wear appropriate protective equipment and self-contained breathing apparatus (SCBA) with a full face-piece operated in positive pressure mode.

Section 6. Accidental release measures

Personal precautions, protective equipment and emergency procedures

For non-emergency personnel : No action shall be taken involving any personal risk or without suitable training. Evacuate surrounding areas. Keep unnecessary and unprotected personnel from entering. Do not touch or walk through spilled material. Shut off all ignition sources. No flares, smoking or flames in hazard area. Avoid breathing vapor or mist. Provide adequate ventilation. Wear appropriate respirator when ventilation is inadequate. Put on appropriate personal protective equipment.

For emergency responders : If specialized clothing is required to deal with the spillage, take note of any information in Section 8 on suitable and unsuitable materials. See also the information in "For non-emergency personnel".

Environmental precautions : Avoid dispersal of spilled material and runoff and contact with soil, waterways, drains and sewers. Inform the relevant authorities if the product has caused environmental pollution (sewers, waterways, soil or air).

Methods and materials for containment and cleaning up

Small spill : Stop leak if without risk. Move containers from spill area. Use spark-proof tools and explosion-proof equipment. Dilute with water and mop up if water-soluble. Alternatively, or if water-insoluble, absorb with an inert dry material and place in an appropriate waste disposal container. Dispose of via a licensed waste disposal contractor.

Large spill : Stop leak if without risk. Move containers from spill area. Use spark-proof tools and explosion-proof equipment. Approach release from upwind. Prevent entry into sewers, water courses, basements or confined areas. Wash spillages into an effluent treatment plant or proceed as follows. Contain and collect spillage with non-combustible, absorbent material e.g. sand, earth, vermiculite or diatomaceous earth and place in container for disposal according to local regulations (see Section 13). Dispose of via a licensed waste disposal contractor. Contaminated absorbent material may pose the same hazard as the spilled product. Note: see Section 1 for emergency contact information and Section 13 for waste disposal.

Section 7. Handling and storage

Precautions for safe handling

Protective measures : Put on appropriate personal protective equipment (see Section 8). Avoid exposure - obtain special instructions before use. Do not handle until all safety precautions have been read and understood. Do not get in eyes or on skin or clothing. Do not ingest. Avoid breathing vapor or mist. Use only with adequate ventilation. Wear appropriate respirator when ventilation is inadequate. Do not enter storage areas and confined spaces unless adequately ventilated. Keep in the original container or an approved alternative made from a compatible material, kept tightly closed when not in use. Store and use away from heat, sparks, open flame or any other ignition source. Use explosion-proof electrical (ventilating, lighting and material handling) equipment. Use only non-sparking tools. Take precautionary measures against electrostatic discharges. Empty containers retain product residue and can be hazardous. Do not reuse container.

Special precautions : If this material is part of a multiple component system, read the Safety Data Sheet(s) for the other component or components before blending as the resulting mixture may have the hazards of all of its parts.

Section 7. Handling and storage

Advice on general occupational hygiene : Eating, drinking and smoking should be prohibited in areas where this material is handled, stored and processed. Workers should wash hands and face before eating, drinking and smoking. Remove contaminated clothing and protective equipment before entering eating areas. See also Section 8 for additional information on hygiene measures.

Conditions for safe storage, including any incompatibilities : Do not store below the following temperature: 5°C (41°F). Store in accordance with local regulations. Store in a segregated and approved area. Store in original container protected from direct sunlight in a dry, cool and well-ventilated area, away from incompatible materials (see Section 10) and food and drink. Store locked up. Eliminate all ignition sources. Separate from oxidizing materials. Keep container tightly closed and sealed until ready for use. Containers that have been opened must be carefully resealed and kept upright to prevent leakage. Do not store in unlabeled containers. Use appropriate containment to avoid environmental contamination.

Section 8. Exposure controls/personal protection

Control parameters

Occupational exposure limits

Ingredient name	Exposure limits
4-chloro-α,α,α-trifluorotoluene	**IPEL (PPG).** TWA: 0.57 ppm STEL: 1.71 ppm
Talc , not containing asbestiform fibres	**ACGIH TLV (United States, 3/2019).** TWA: 2 mg/m³ 8 hours. Form: Respirable **OSHA PEL Z3 (United States).** TWA: 2 mg/m³
titanium dioxide	**OSHA PEL (United States, 5/2018).** TWA: 15 mg/m³ 8 hours. Form: Total dust **ACGIH TLV (United States, 3/2019).** TWA: 10 mg/m³ 8 hours.
barium sulfate	**ACGIH TLV (United States, 3/2019).** TWA: 5 mg/m³ 8 hours. Form: Inhalable fraction **OSHA PEL (United States, 5/2018).** TWA: 5 mg/m³ 8 hours. Form: Respirable fraction TWA: 15 mg/m³ 8 hours. Form: Total dust
xylene	**ACGIH TLV (United States, 3/2019).** STEL: 651 mg/m³ 15 minutes. STEL: 150 ppm 15 minutes. TWA: 434 mg/m³ 8 hours. TWA: 100 ppm 8 hours. **OSHA PEL (United States, 5/2018).** TWA: 435 mg/m³ 8 hours. TWA: 100 ppm 8 hours.
heptan-2-one	**ACGIH TLV (United States, 3/2019).** TWA: 233 mg/m³ 8 hours. TWA: 50 ppm 8 hours. **OSHA PEL (United States, 5/2018).** TWA: 465 mg/m³ 8 hours.

Section 8. Exposure controls/personal protection

ethylbenzene	TWA: 100 ppm 8 hours. **ACGIH TLV (United States, 3/2019).** TWA: 20 ppm 8 hours. **OSHA PEL (United States, 5/2018).** TWA: 435 mg/m³ 8 hours. TWA: 100 ppm 8 hours.

Key to abbreviations

A	= Acceptable Maximum Peak	S	= Potential skin absorption
ACGIH	= American Conference of Governmental Industrial Hygienists.	SR	= Respiratory sensitization
C	= Ceiling Limit	SS	= Skin sensitization
F	= Fume	STEL	= Short term Exposure limit values
IPEL	= Internal Permissible Exposure Limit	TD	= Total dust
OSHA	= Occupational Safety and Health Administration.	TLV	= Threshold Limit Value
R	= Respirable	TWA	= Time Weighted Average
Z	= OSHA 29 CFR 1910.1200 Subpart Z - Toxic and Hazardous Substances		

Consult local authorities for acceptable exposure limits.

Recommended monitoring procedures : If this product contains ingredients with exposure limits, personal, workplace atmosphere or biological monitoring may be required to determine the effectiveness of the ventilation or other control measures and/or the necessity to use respiratory protective equipment. Reference should be made to appropriate monitoring standards. Reference to national guidance documents for methods for the determination of hazardous substances will also be required.

Appropriate engineering controls : Use only with adequate ventilation. Use process enclosures, local exhaust ventilation or other engineering controls to keep worker exposure to airborne contaminants below any recommended or statutory limits. The engineering controls also need to keep gas, vapor or dust concentrations below any lower explosive limits. Use explosion-proof ventilation equipment.

Environmental exposure controls : Emissions from ventilation or work process equipment should be checked to ensure they comply with the requirements of environmental protection legislation. In some cases, fume scrubbers, filters or engineering modifications to the process equipment will be necessary to reduce emissions to acceptable levels.

Individual protection measures

Hygiene measures : Wash hands, forearms and face thoroughly after handling chemical products, before eating, smoking and using the lavatory and at the end of the working period. Appropriate techniques should be used to remove potentially contaminated clothing. Wash contaminated clothing before reusing. Ensure that eyewash stations and safety showers are close to the workstation location.

Eye/face protection : Chemical splash goggles.

Skin protection

Hand protection : Chemical-resistant, impervious gloves complying with an approved standard should be worn at all times when handling chemical products if a risk assessment indicates this is necessary. Considering the parameters specified by the glove manufacturer, check during use that the gloves are still retaining their protective properties. It should be noted that the time to breakthrough for any glove material may be different for different glove manufacturers. In the case of mixtures, consisting of several substances, the protection time of the gloves cannot be accurately estimated.

Section 8. Exposure controls/personal protection

Gloves : For prolonged or repeated handling, use the following type of gloves:

Recommended: neoprene, natural rubber (latex), polyvinyl alcohol (PVA), Viton®
Not recommended: nitrile rubber

Body protection : Personal protective equipment for the body should be selected based on the task being performed and the risks involved and should be approved by a specialist before handling this product. When there is a risk of ignition from static electricity, wear anti-static protective clothing. For the greatest protection from static discharges, clothing should include anti-static overalls, boots and gloves.

Other skin protection : Appropriate footwear and any additional skin protection measures should be selected based on the task being performed and the risks involved and should be approved by a specialist before handling this product.

Respiratory protection : Respirator selection must be based on known or anticipated exposure levels, the hazards of the product and the safe working limits of the selected respirator. If workers are exposed to concentrations above the exposure limit, they must use appropriate, certified respirators. Use a properly fitted, air-purifying or air-fed respirator complying with an approved standard if a risk assessment indicates this is necessary.

Section 9. Physical and chemical properties

Appearance

Physical state : Liquid.

Color : Not available.

Odor : Not available.

Odor threshold : Not available.

pH : Not available.

Melting point : Not available.

Boiling point : >37.78°C (>100°F)

Flash point : Closed cup: 26.67°C (80°F)

Auto-ignition temperature : Not available.

Decomposition temperature : Not available.

Flammability (solid, gas) : Not available.

Lower and upper explosive (flammable) limits : Not available.

Evaporation rate : Not available.

Vapor pressure : Not available.

Vapor density : Not available.

Relative density : 1.62

Density (lbs / gal) : 13.52

Solubility : Insoluble in the following materials: cold water.

Partition coefficient: n-octanol/water : Not available.

Viscosity : Kinematic (40°C (104°F)): >0.21 cm^2/s (>21 cSt)

Volatility : 60% (v/v), 43.213% (w/w)

% Solid. (w/w) : 56.787

Section 10. Stability and reactivity

Reactivity : No specific test data related to reactivity available for this product or its ingredients.

Chemical stability : The product is stable.

Possibility of hazardous reactions : Under normal conditions of storage and use, hazardous reactions will not occur.

Conditions to avoid : When exposed to high temperatures may produce hazardous decomposition products. Refer to protective measures listed in sections 7 and 8.

Incompatible materials : Keep away from the following materials to prevent strong exothermic reactions: oxidizing agents, strong alkalis, strong acids.

Hazardous decomposition products : Decomposition products may include the following materials: carbon monoxide, carbon dioxide, smoke, oxides of nitrogen.

Section 11. Toxicological information

Information on toxicological effects

Acute toxicity

Product/ingredient name	Result	Species	Dose	Exposure
4-chloro-α,α,α-trifluorotoluene	LC50 Inhalation Vapor	Rat	33080 mg/m³	4 hours
	LD50 Dermal	Rabbit	>2.7 g/kg	-
	LD50 Oral	Rat	13 g/kg	-
titanium dioxide	LC50 Inhalation Dusts and mists	Rat	>6.82 mg/l	4 hours
	LD50 Dermal	Rabbit	>5000 mg/kg	-
	LD50 Oral	Rat	>5000 mg/kg	-
barium sulfate	LD50 Dermal	Rat	>2000 mg/kg	-
	LD50 Oral	Rat	>5000 mg/kg	-
xylene	LD50 Dermal	Rabbit	1.7 g/kg	-
	LD50 Oral	Rat	4.3 g/kg	-
heptan-2-one	LC50 Inhalation Vapor	Rat	16.7 mg/l	4 hours
	LD50 Dermal	Rabbit	10.206 g/kg	-
	LD50 Oral	Rat	1.6 g/kg	-
ethylbenzene	LC50 Inhalation Vapor	Rat	17.8 mg/l	4 hours
	LD50 Dermal	Rabbit	17.8 g/kg	-
	LD50 Oral	Rat	3.5 g/kg	-

Conclusion/Summary : There are no data available on the mixture itself.

Irritation/Corrosion

Product/ingredient name	Result	Species	Score	Exposure	Observation
xylene	Skin - Moderate irritant	Rabbit	-	24 hours 500 mg	-

Conclusion/Summary

Skin : There are no data available on the mixture itself.

Eyes : There are no data available on the mixture itself.

Section 11. Toxicological information

Respiratory : There are no data available on the mixture itself.

Sensitization

Conclusion/Summary

Skin : There are no data available on the mixture itself.

Respiratory : There are no data available on the mixture itself.

Mutagenicity

Conclusion/Summary : There are no data available on the mixture itself.

Carcinogenicity

Conclusion/Summary : There are no data available on the mixture itself.

Classification

Product/ingredient name	OSHA	IARC	NTP
[redacted]-chloro-α,α,α-trifluorotoluene	-	2B	-
titanium dioxide	-	2B	-
xylene	-	3	-
ethylbenzene	-	2B	-

Carcinogen Classification code:

IARC: 1, 2A, 2B, 3, 4
NTP: Known to be a human carcinogen; Reasonably anticipated to be a human carcinogen
OSHA: +
Not listed/not regulated: -

Reproductive toxicity

Conclusion/Summary : There are no data available on the mixture itself.

Teratogenicity

Conclusion/Summary : There are no data available on the mixture itself.

Specific target organ toxicity (single exposure)

Name	Category	Route of exposure	Target organs
[redacted]-chloro-α,α,α-trifluorotoluene	Category 3	-	Respiratory tract irritation
Talc , not containing asbestiform fibres	Category 3	-	Respiratory tract irritation
xylene	Category 3	-	Respiratory tract irritation
heptan-2-one	Category 3	-	Narcotic effects

Specific target organ toxicity (repeated exposure)

Name	Category	Route of exposure	Target organs
[redacted]thylbenzene	Category 2	-	hearing organs

Target organs : [redacted]ontains material which causes damage to the following organs: brain, central nervous system (CNS).
Contains material which may cause damage to the following organs: kidneys, lungs, the nervous system, liver, peripheral nervous system, cardiovascular system, upper respiratory tract, skin, adrenal, eye, lens or cornea.

Section 11. Toxicological information

Aspiration hazard

Name	Result
xylene	ASPIRATION HAZARD - Category 1
ethylbenzene	ASPIRATION HAZARD - Category 1

Information on the likely routes of exposure

Potential acute health effects

Eye contact : Causes serious eye irritation.
Inhalation : May cause respiratory irritation.
Skin contact : Causes skin irritation. Defatting to the skin.
Ingestion : No known significant effects or critical hazards.

Over-exposure signs/symptoms

Eye contact : Adverse symptoms may include the following:
pain or irritation
watering
redness

Inhalation : Adverse symptoms may include the following:
respiratory tract irritation
coughing

Skin contact : Adverse symptoms may include the following:
irritation
redness
dryness
cracking

Ingestion : No specific data.

Delayed and immediate effects and also chronic effects from short and long term exposure

Conclusion/Summary : There are no data available on the mixture itself. This product contains TiO2 which has been classified as a GHS Carcinogen Category 2 based on its IARC 2B classification. For many PPG products, TiO2 is utilized as a raw material in a liquid coating formulation. In this case, the TiO2 particles are bound in a matrix with no meaningful potential for human exposure to unbound particles of TiO2 when the product is applied with a brush or roller. Sanding the coating surface or mist from spray applications may be harmful depending on the duration and level of exposure and require the use of appropriate personal protective equipment and/or engineering controls (see Section 8). Exposure to component solvent vapor concentrations in excess of the stated occupational exposure limit may result in adverse health effects such as mucous membrane and respiratory system irritation and adverse effects on the kidneys, liver and central nervous system. Symptoms and signs include headache, dizziness, fatigue, muscular weakness, drowsiness and, in extreme cases, loss of consciousness. Solvents may cause some of the above effects by absorption through the skin. There is some evidence that repeated exposure to organic solvent vapors in combination with constant loud noise can cause greater hearing loss than expected from exposure to noise alone. If splashed in the eyes, the liquid may cause irritation and reversible damage. Ingestion may cause nausea, diarrhea and vomiting. This takes into account, where known, delayed and immediate effects and also chronic effects of components from short-term and long-term exposure by oral, inhalation and dermal routes of exposure and eye contact.

Short term exposure

Potential immediate effects : There are no data available on the mixture itself.

Section 11. Toxicological information

Potential delayed effects : There are no data available on the mixture itself.

Long term exposure

Potential immediate effects : There are no data available on the mixture itself.

Potential delayed effects : There are no data available on the mixture itself.

Potential chronic health effects

General : Prolonged or repeated contact can defat the skin and lead to irritation, cracking and/or dermatitis.

Carcinogenicity : Suspected of causing cancer. Risk of cancer depends on duration and level of exposure.

Mutagenicity : No known significant effects or critical hazards.

Reproductive toxicity : No known significant effects or critical hazards.

Numerical measures of toxicity

Acute toxicity estimates

Product/ingredient name	Oral (mg/kg)	Dermal (mg/kg)	Inhalation (gases) (ppm)	Inhalation (vapors) (mg/l)	Inhalation (dusts and mists) (mg/l)
A-CHROMATIC SURFACER- WHITE	21953.5	3524.4	N/A	85.1	9.7
4-chloro-α,α,α-trifluorotoluene	13000	2500	N/A	33.08	N/A
barium sulfate	N/A	2500	N/A	N/A	N/A
xylene	4300	1700	N/A	11	1.5
heptan-2-one	1600	10206	N/A	16.7	1.5
ethylbenzene	3500	17800	N/A	17.8	1.5

Section 12. Ecological information

Toxicity

Product/ingredient name	Result	Species	Exposure
Titanium dioxide	Acute LC50 >100 mg/l Fresh water	Daphnia - Daphnia magna	48 hours
heptan-2-one	Acute LC50 131 mg/l	Fish	96 hours
ethylbenzene	Acute LC50 150 to 200 mg/l Fresh water	Fish	96 hours

Persistence and degradability

Product/ingredient name	Test	Result	Dose	Inoculum
heptan-2-one	OECD 310	69 % - Readily - 28 days	-	-

Product/ingredient name	Aquatic half-life	Photolysis	Biodegradability
xylene	-	-	Readily
heptan-2-one	-	-	Readily
ethylbenzene	-	-	Readily

Bioaccumulative potential

Section 12. Ecological information

Product/ingredient name	$LogP_{ow}$	BCF	Potential
xylene	3.16	7.4 to 18.5	low
heptan-2-one	1.98	-	low
ethylbenzene	3.15	79.43	low

Mobility in soil

Soil/water partition coefficient (K_{OC}) : Not available.

Section 13. Disposal considerations

Disposal methods : The generation of waste should be avoided or minimized wherever possible. Disposal of this product, solutions and any by-products should at all times comply with the requirements of environmental protection and waste disposal legislation and any regional local authority requirements. Dispose of surplus and non-recyclable products via a licensed waste disposal contractor. Waste should not be disposed of untreated to the sewer unless fully compliant with the requirements of all authorities with jurisdiction. Waste packaging should be recycled. Incineration or landfill should only be considered when recycling is not feasible. This material and its container must be disposed of in a safe way. Care should be taken when handling emptied containers that have not been cleaned or rinsed out. Empty containers or liners may retain some product residues. Vapor from product residues may create a highly flammable or explosive atmosphere inside the container. Do not cut, weld or grind used containers unless they have been cleaned thoroughly internally. Avoid dispersal of spilled material and runoff and contact with soil, waterways, drains and sewers.

Disposal should be in accordance with applicable regional, national and local laws and regulations.

Refer to Section 7: HANDLING AND STORAGE and Section 8: EXPOSURE CONTROLS/PERSONAL PROTECTION for additional handling information and protection of employees. Section 6. Accidental release measures

14. Transport information

	DOT	IMDG	IATA
UN number	UN1263	UN1263	UN1263
UN proper shipping name	PAINT	PAINT	PAINT
Transport hazard class (es)	3	3	3
Packing group	III	III	III
Environmental hazards	No.	No.	No.
Marine pollutant substances	Not applicable.	Not applicable.	Not applicable.
Product RQ (lbs)	2040	Not applicable.	Not applicable.
RQ substances	(xylene)	Not applicable.	Not applicable.

Additional information

14. Transport information

DOT : Package sizes shipped in quantities less than the product reportable quantity are not subject to the RQ (reportable quantity) transportation requirements.

IMDG : None identified.

IATA : None identified.

Special precautions for user : **Transport within user's premises:** always transport in closed containers that are upright and secure. Ensure that persons transporting the product know what to do in the event of an accident or spillage.

Transport in bulk according to IMO instruments : Not applicable.

Section 15. Regulatory information

United States

United States inventory (TSCA 8b) : All components are active or exempted.

U.S. Federal regulations :

United States - TSCA 12(b) - Chemical export notification:

-chloro-α,α,α-trifluorotoluene — One time notification

United States - TSCA 5(a)2 - Final significant new use rules:

-chloro-α,α,α-trifluorotoluene — Listed — 40 CFR 799.5089

SARA 302/304

SARA 304 RQ : Not applicable.

Composition/information on ingredients

No products were found.

SARA 311/312

Classification : FLAMMABLE LIQUIDS - Category 3
SKIN IRRITATION - Category 2
EYE IRRITATION - Category 2A
CARCINOGENICITY - Category 2
SPECIFIC TARGET ORGAN TOXICITY (SINGLE EXPOSURE) (Respiratory tract irritation) - Category 3
HNOC - Defatting irritant

Composition/information on ingredients

Name	%	Classification
-chloro-α,α,α-trifluorotoluene	≥20 - ≤50	FLAMMABLE LIQUIDS - Category 3 SKIN IRRITATION - Category 2 EYE IRRITATION - Category 2A CARCINOGENICITY - Category 2 SPECIFIC TARGET ORGAN TOXICITY (SINGLE EXPOSURE) (Respiratory tract irritation) - Category 3 HNOC - Defatting irritant
Talc , not containing asbestiform fibres	≥10 - ≤20	SPECIFIC TARGET ORGAN TOXICITY (SINGLE EXPOSURE) (Respiratory tract irritation) - Category 3
titanium dioxide	≥10 - ≤20	CARCINOGENICITY - Category 2
xylene	≥1.0 - ≤5.0	FLAMMABLE LIQUIDS - Category 3

Section 15. Regulatory information

heptan-2-one	≥1.0 - ≤5.0	ACUTE TOXICITY (dermal) - Category 4 ACUTE TOXICITY (inhalation) - Category 4 SKIN IRRITATION - Category 2 EYE IRRITATION - Category 2A SPECIFIC TARGET ORGAN TOXICITY (SINGLE EXPOSURE) (Respiratory tract irritation) - Category 3 ASPIRATION HAZARD - Category 1 FLAMMABLE LIQUIDS - Category 3 ACUTE TOXICITY (oral) - Category 4 ACUTE TOXICITY (inhalation) - Category 4 SPECIFIC TARGET ORGAN TOXICITY (SINGLE EXPOSURE) (Narcotic effects) - Category 3 HNOC - Defatting irritant
ethylbenzene	<1.0	FLAMMABLE LIQUIDS - Category 2 ACUTE TOXICITY (inhalation) - Category 4 CARCINOGENICITY - Category 2 SPECIFIC TARGET ORGAN TOXICITY (REPEATED EXPOSURE) - Category 2 ASPIRATION HAZARD - Category 1 HNOC - Defatting irritant

SARA 313

Supplier notification :

Chemical name	CAS number	Concentration
xylene	1330-20-7	1 - 5
ethylbenzene	100-41-4	0.1 - 1

SARA 313 notifications must not be detached from the SDS and any copying and redistribution of the SDS shall include copying and redistribution of the notice attached to copies of the SDS subsequently redistributed.

Additional environmental information is contained on the Environmental Data Sheet for this product, which can be obtained from your PPG representative.

California Prop. 65

⚠ **WARNING**: Cancer - www.P65Warnings.ca.gov.

Section 16. Other information

Hazardous Material Information System (U.S.A.)

Health : 2 * **Flammability** : 3 **Physical hazards** : 0

(*) - Chronic effects

Caution: HMIS® ratings are based on a 0-4 rating scale, with 0 representing minimal hazards or risks, and 4 representing significant hazards or risks. Although HMIS® ratings and the associated label are not required on MSDSs or products leaving a facility under 29 CFR 1910.1200, the preparer may choose to provide them. HMIS® ratings are to be used with a fully implemented HMIS® program. HMIS® is a registered trademark and service mark of the American Coatings Association, Inc.

The customer is responsible for determining the PPE code for this material. For more information on HMIS® Personal Protective Equipment (PPE) codes, consult the HMIS® Implementation Manual.

National Fire Protection Association (U.S.A.)

Health : 2 **Flammability** : 3 **Instability** : 0

Date of previous issue : **12/15/2019**

Organization that prepared the MSDS : EHS

Section 16. Other information

Key to abbreviations : ATE = Acute Toxicity Estimate
BCF = Bioconcentration Factor
GHS = Globally Harmonized System of Classification and Labelling of Chemicals
IATA = International Air Transport Association
IBC = Intermediate Bulk Container
IMDG = International Maritime Dangerous Goods
LogPow = logarithm of the octanol/water partition coefficient
MARPOL = International Convention for the Prevention of Pollution From Ships, 1973 as modified by the Protocol of 1978. ("Marpol" = marine pollution)
N/A = Not available
SGG = Segregation Group
UN = United Nations

◤ **Indicates information that has changed from previously issued version.**

Disclaimer

The information contained in this data sheet is based on present scientific and technical knowledge. The purpose of this information is to draw attention to the health and safety aspects concerning the products supplied by PPG, and to recommend precautionary measures for the storage and handling of the products. No warranty or guarantee is given in respect of the properties of the products. No liability can be accepted for any failure to observe the precautionary measures described in this data sheet or for any misuse of the products.

SAFETY DATA SHEET

Date of issue/Date of revision **14 June 2020**
Version 14

Section 1. Identification

Product name	: EPOXY PRIMER CATALYST
Product code	: DP402LF
Other means of identification	: Not available.
Product type	: Liquid.

Relevant identified uses of the substance or mixture and uses advised against

Product use	: Industrial applications.
Use of the substance/ mixture	: Coating. Paints. Painting-related materials.
Uses advised against	: Not applicable.

Manufacturer	: PPG Industries, Inc. One PPG Place, Pittsburgh, PA 15272
Emergency telephone number	: (412) 434-4515 (U.S.) (514) 645-1320 (Canada) SETIQ Interior de la República: 800-00-214-00 (México) SETIQ Ciudad de México: (55) 5559-1588 (México)
Technical Phone Number	: 1-800-647-6050

Section 2. Hazards identification

OSHA/HCS status	: This material is considered hazardous by the OSHA Hazard Communication Standard (29 CFR 1910.1200).
Classification of the substance or mixture	: FLAMMABLE LIQUIDS - Category 2 SERIOUS EYE DAMAGE - Category 1 TOXIC TO REPRODUCTION - Category 2 SPECIFIC TARGET ORGAN TOXICITY (SINGLE EXPOSURE) (Respiratory tract irritation) - Category 3 SPECIFIC TARGET ORGAN TOXICITY (SINGLE EXPOSURE) (Narcotic effects) - Category 3 SPECIFIC TARGET ORGAN TOXICITY (REPEATED EXPOSURE) - Category 2 Percentage of the mixture consisting of ingredient(s) of unknown acute toxicity: 23.8% (Oral), 34.4% (Dermal), 68.4% (Inhalation)

GHS label elements

Section 2. Hazards identification

Hazard pictograms :

Signal word : Danger

Hazard statements : Highly flammable liquid and vapor.
Causes serious eye damage.
May cause respiratory irritation.
May cause drowsiness or dizziness.
Suspected of damaging fertility or the unborn child.
May cause damage to organs through prolonged or repeated exposure.

Precautionary statements

Prevention : Obtain special instructions before use. Wear protective gloves. Wear protective clothing. Wear eye or face protection. Keep away from heat, hot surfaces, sparks, open flames and other ignition sources. No smoking. Use explosion-proof electrical, ventilating or lighting equipment. Use non-sparking tools. Take action to prevent static discharges. Do not breathe vapor.

Response : Immediately call a POISON CENTER or doctor. IF IN EYES: Rinse cautiously with water for several minutes. Remove contact lenses, if present and easy to do. Continue rinsing.

Storage : Store in a well-ventilated place. Keep container tightly closed. Keep cool.

Disposal : Dispose of contents and container in accordance with all local, regional, national and international regulations.

Supplemental label elements : Repeated exposure to high vapor concentrations may cause irritation of the respiratory system and permanent brain and nervous system damage. Inhalation of vapor/aerosol concentrations above the recommended exposure limits causes headaches, drowsiness and nausea and may lead to unconsciousness or death. Avoid contact with skin and clothing. Wash thoroughly after handling. Emits toxic fumes when heated. DANGER - RAGS, STEEL WOOL OR WASTE SOAKED WITH THIS PRODUCT MAY SPONTANEOUSLY CATCH FIRE IF IMPROPERLY DISCARDED. IMMEDIATELY AFTER EACH USE, PLACE RAGS, STEEL WOOL OR WASTE IN A SEALED WATER-FILLED METAL CONTAINER.

Hazards not otherwise classified : Prolonged or repeated contact may dry skin and cause irritation.

Section 3. Composition/information on ingredients

Substance/mixture : Mixture

Product name : EPOXY PRIMER CATALYST

Section 3. Composition/information on ingredients

Ingredient name	%	CAS number
Isopropyl alcohol	≥10 - ≤20	67-63-0
1-methoxy-2-propanol	≥10 - ≤20	107-98-2
isobutyl acetate	≥10 - ≤20	110-19-0
n-butyl acetate	≥5.0 - ≤10	123-86-4
Solvent naphtha (petroleum), light aromatic	≥1.0 - ≤5.0	64742-95-6
butan-1-ol	≥1.0 - ≤5.0	71-36-3
1,2,4-trimethylbenzene	≥0.10 - ≤2.7	95-63-6
toluene	≤1.8	108-88-3
Naphtha (petroleum), hydrotreated heavy	≥1.0 - ≤5.0	64742-48-9

SUB codes represent substances without registered CAS Numbers.

Any concentration shown as a range is to protect confidentiality or is due to batch variation.

There are no additional ingredients present which, within the current knowledge of the supplier and in the concentrations applicable, are classified as hazardous to health or the environment and hence require reporting in this section.

Occupational exposure limits, if available, are listed in Section 8.

Section 4. First aid measures

If ingestion, irritation, any type of overexposure or symptoms of overexposure occur during or persists after use of this product, contact a POISON CONTROL CENTER, EMERGENCY ROOM OR PHYSICIAN immediately; have Safety Data Sheet information available. Never give anything by mouth to an unconscious or convulsing person.

Description of necessary first aid measures

Eye contact : Check for and remove any contact lenses. Immediately flush eyes with running water for at least 15 minutes, keeping eyelids open. Seek immediate medical attention.

Inhalation : Remove to fresh air. Keep person warm and at rest. If not breathing, if breathing is irregular or if respiratory arrest occurs, provide artificial respiration or oxygen by trained personnel.

Skin contact : Remove contaminated clothing and shoes. Wash skin thoroughly with soap and water or use recognized skin cleanser. Do NOT use solvents or thinners.

Ingestion : If swallowed, seek medical advice immediately and show this container or label. Keep person warm and at rest. Do NOT induce vomiting.

Most important symptoms/effects, acute and delayed

Potential acute health effects

Eye contact : Causes serious eye damage.

Inhalation : Can cause central nervous system (CNS) depression. May cause drowsiness or dizziness. May cause respiratory irritation.

Skin contact : Defatting to the skin. May cause skin dryness and irritation.

Ingestion : Can cause central nervous system (CNS) depression.

Over-exposure signs/symptoms

Eye contact : Adverse symptoms may include the following:
pain
watering
redness

Section 4. First aid measures

Inhalation : Adverse symptoms may include the following:
respiratory tract irritation
coughing
nausea or vomiting
headache
drowsiness/fatigue
dizziness/vertigo
unconsciousness
reduced fetal weight
increase in fetal deaths
skeletal malformations

Skin contact : Adverse symptoms may include the following:
pain or irritation
redness
dryness
cracking
blistering may occur
reduced fetal weight
increase in fetal deaths
skeletal malformations

Ingestion : Adverse symptoms may include the following:
stomach pains
reduced fetal weight
increase in fetal deaths
skeletal malformations

Indication of immediate medical attention and special treatment needed, if necessary

Notes to physician : In case of inhalation of decomposition products in a fire, symptoms may be delayed. The exposed person may need to be kept under medical surveillance for 48 hours.

Specific treatments : No specific treatment.

Protection of first-aiders : No action shall be taken involving any personal risk or without suitable training. If it is suspected that fumes are still present, the rescuer should wear an appropriate mask or self-contained breathing apparatus. It may be dangerous to the person providing aid to give mouth-to-mouth resuscitation. Wash contaminated clothing thoroughly with water before removing it, or wear gloves.

See toxicological information (Section 11)

Section 5. Fire-fighting measures

Extinguishing media

Suitable extinguishing media : Use dry chemical, CO_2, water spray (fog) or foam.

Unsuitable extinguishing media : Do not use water jet.

Specific hazards arising from the chemical : Highly flammable liquid and vapor. In a fire or if heated, a pressure increase will occur and the container may burst, with the risk of a subsequent explosion. Vapors may accumulate in low or confined areas or travel a considerable distance to a source of ignition and flash back. Runoff to sewer may create fire or explosion hazard.

Section 5. Fire-fighting measures

Hazardous thermal decomposition products : Decomposition products may include the following materials:
carbon oxides
nitrogen oxides
halogenated compounds

Special protective actions for fire-fighters : Promptly isolate the scene by removing all persons from the vicinity of the incident if there is a fire. No action shall be taken involving any personal risk or without suitable training. Move containers from fire area if this can be done without risk. Use water spray to keep fire-exposed containers cool.

Special protective equipment for fire-fighters : Fire-fighters should wear appropriate protective equipment and self-contained breathing apparatus (SCBA) with a full face-piece operated in positive pressure mode.

Section 6. Accidental release measures

Personal precautions, protective equipment and emergency procedures

For non-emergency personnel : No action shall be taken involving any personal risk or without suitable training. Evacuate surrounding areas. Keep unnecessary and unprotected personnel from entering. Do not touch or walk through spilled material. Shut off all ignition sources. No flares, smoking or flames in hazard area. Do not breathe vapor or mist. Provide adequate ventilation. Wear appropriate respirator when ventilation is inadequate. Put on appropriate personal protective equipment.

For emergency responders : If specialized clothing is required to deal with the spillage, take note of any information in Section 8 on suitable and unsuitable materials. See also the information in "For non-emergency personnel".

Environmental precautions : Avoid dispersal of spilled material and runoff and contact with soil, waterways, drains and sewers. Inform the relevant authorities if the product has caused environmental pollution (sewers, waterways, soil or air).

Methods and materials for containment and cleaning up

Small spill : Stop leak if without risk. Move containers from spill area. Use spark-proof tools and explosion-proof equipment. Dilute with water and mop up if water-soluble. Alternatively, or if water-insoluble, absorb with an inert dry material and place in an appropriate waste disposal container. Dispose of via a licensed waste disposal contractor.

Large spill : Stop leak if without risk. Move containers from spill area. Use spark-proof tools and explosion-proof equipment. Approach release from upwind. Prevent entry into sewers, water courses, basements or confined areas. Wash spillages into an effluent treatment plant or proceed as follows. Contain and collect spillage with non-combustible, absorbent material e.g. sand, earth, vermiculite or diatomaceous earth and place in container for disposal according to local regulations (see Section 13). Dispose of via a licensed waste disposal contractor. Contaminated absorbent material may pose the same hazard as the spilled product. Note: see Section 1 for emergency contact information and Section 13 for waste disposal.

Section 7. Handling and storage

Precautions for safe handling

Protective measures : Put on appropriate personal protective equipment (see Section 8). Avoid exposure - obtain special instructions before use. Avoid exposure during pregnancy. Do not handle until all safety precautions have been read and understood. Do not get in eyes or on skin or clothing. Do not breathe vapor or mist. Do not ingest. Use only with adequate ventilation. Wear appropriate respirator when ventilation is inadequate. Do not enter storage areas and confined spaces unless adequately ventilated. Keep in the original container or an approved alternative made from a compatible material, kept tightly closed when not in use. Store and use away from heat, sparks, open flame or any other ignition source. Use explosion-proof electrical (ventilating, lighting and material handling) equipment. Use only non-sparking tools. Take precautionary measures against electrostatic discharges. Empty containers retain product residue and can be hazardous. Do not reuse container.

Special precautions : Vapors may accumulate in low or confined areas or travel a considerable distance to a source of ignition and flash back. Vapors are heavier than air and may spread along floors. Materials such as cleaning rags, paper wipes and protective clothing, which are contaminated with the product may spontaneously self-ignite some hours later. To avoid the risks of fires, all contaminated materials should be stored in purpose-built containers or in metal containers with tight-fitting, self-closing lids. Contaminated materials should be removed from the workplace at the end of each working day and be stored outside. If this material is part of a multiple component system, read the Safety Data Sheet(s) for the other component or components before blending as the resulting mixture may have the hazards of all of its parts.

Advice on general occupational hygiene : Eating, drinking and smoking should be prohibited in areas where this material is handled, stored and processed. Workers should wash hands and face before eating, drinking and smoking. Remove contaminated clothing and protective equipment before entering eating areas. See also Section 8 for additional information on hygiene measures.

Conditions for safe storage, including any incompatibilities : Do not store below the following temperature: 5°C (41°F). Store in accordance with local regulations. Store in a segregated and approved area. Store in original container protected from direct sunlight in a dry, cool and well-ventilated area, away from incompatible materials (see Section 10) and food and drink. Store locked up. Eliminate all ignition sources. Separate from oxidizing materials. Keep container tightly closed and sealed until ready for use. Containers that have been opened must be carefully resealed and kept upright to prevent leakage. Do not store in unlabeled containers. Use appropriate containment to avoid environmental contamination.

Section 8. Exposure controls/personal protection

Control parameters

Occupational exposure limits

Section 8. Exposure controls/personal protection

Ingredient name	Exposure limits
Isopropyl alcohol	**ACGIH TLV (United States, 3/2019).** STEL: 400 ppm 15 minutes. TWA: 200 ppm 8 hours. **OSHA PEL (United States, 5/2018).** TWA: 980 mg/m³ 8 hours. TWA: 400 ppm 8 hours.
1-methoxy-2-propanol	**ACGIH TLV (United States, 3/2019).** STEL: 369 mg/m³ 15 minutes. STEL: 100 ppm 15 minutes. TWA: 184 mg/m³ 8 hours. TWA: 50 ppm 8 hours.
isobutyl acetate	**OSHA PEL (United States, 5/2018).** TWA: 700 mg/m³ 8 hours. TWA: 150 ppm 8 hours. **ACGIH TLV (United States, 3/2019).** STEL: 150 ppm 15 minutes. TWA: 50 ppm 8 hours.
n-butyl acetate	**OSHA PEL (United States, 5/2018).** TWA: 710 mg/m³ 8 hours. TWA: 150 ppm 8 hours. **ACGIH TLV (United States, 3/2019).** STEL: 150 ppm 15 minutes. TWA: 50 ppm 8 hours.
Solvent naphtha (petroleum), light aromatic	None.
butan-1-ol	**ACGIH TLV (United States, 3/2019).** TWA: 20 ppm 8 hours. **OSHA PEL (United States, 5/2018).** TWA: 300 mg/m³ 8 hours. TWA: 100 ppm 8 hours.
1,2,4-trimethylbenzene	**ACGIH TLV (United States, 3/2019).** TWA: 123 mg/m³ 8 hours. TWA: 25 ppm 8 hours.
toluene	**OSHA PEL Z2 (United States, 2/2013).** AMP: 500 ppm 10 minutes. CEIL: 300 ppm TWA: 200 ppm 8 hours. **ACGIH TLV (United States, 3/2019).** TWA: 20 ppm 8 hours.
Naphtha (petroleum), hydrotreated heavy	None.

Key to abbreviations

A	= Acceptable Maximum Peak	S	= Potential skin absorption
ACGIH	= American Conference of Governmental Industrial Hygienists.	SR	= Respiratory sensitization
C	= Ceiling Limit	SS	= Skin sensitization
F	= Fume	STEL	= Short term Exposure limit values
IPEL	= Internal Permissible Exposure Limit	TD	= Total dust
OSHA	= Occupational Safety and Health Administration.	TLV	= Threshold Limit Value
R	= Respirable	TWA	= Time Weighted Average
Z	= OSHA 29 CFR 1910.1200 Subpart Z - Toxic and Hazardous Substances		

Consult local authorities for acceptable exposure limits.

Section 8. Exposure controls/personal protection

Recommended monitoring procedures : If this product contains ingredients with exposure limits, personal, workplace atmosphere or biological monitoring may be required to determine the effectiveness of the ventilation or other control measures and/or the necessity to use respiratory protective equipment. Reference should be made to appropriate monitoring standards. Reference to national guidance documents for methods for the determination of hazardous substances will also be required.

Appropriate engineering controls : Use only with adequate ventilation. Use process enclosures, local exhaust ventilation or other engineering controls to keep worker exposure to airborne contaminants below any recommended or statutory limits. The engineering controls also need to keep gas, vapor or dust concentrations below any lower explosive limits. Use explosion-proof ventilation equipment.

Environmental exposure controls : Emissions from ventilation or work process equipment should be checked to ensure they comply with the requirements of environmental protection legislation. In some cases, fume scrubbers, filters or engineering modifications to the process equipment will be necessary to reduce emissions to acceptable levels.

Individual protection measures

Hygiene measures : Wash hands, forearms and face thoroughly after handling chemical products, before eating, smoking and using the lavatory and at the end of the working period. Appropriate techniques should be used to remove potentially contaminated clothing. Wash contaminated clothing before reusing. Ensure that eyewash stations and safety showers are close to the workstation location.

Eye/face protection : Chemical splash goggles and face shield.

Skin protection

Hand protection : Chemical-resistant, impervious gloves complying with an approved standard should be worn at all times when handling chemical products if a risk assessment indicates this is necessary. Considering the parameters specified by the glove manufacturer, check during use that the gloves are still retaining their protective properties. It should be noted that the time to breakthrough for any glove material may be different for different glove manufacturers. In the case of mixtures, consisting of several substances, the protection time of the gloves cannot be accurately estimated.

Gloves : For prolonged or repeated handling, use the following type of gloves:

Recommended: nitrile rubber

Body protection : Personal protective equipment for the body should be selected based on the task being performed and the risks involved and should be approved by a specialist before handling this product. When there is a risk of ignition from static electricity, wear anti-static protective clothing. For the greatest protection from static discharges, clothing should include anti-static overalls, boots and gloves.

Other skin protection : Appropriate footwear and any additional skin protection measures should be selected based on the task being performed and the risks involved and should be approved by a specialist before handling this product.

Respiratory protection : Respirator selection must be based on known or anticipated exposure levels, the hazards of the product and the safe working limits of the selected respirator. If workers are exposed to concentrations above the exposure limit, they must use appropriate, certified respirators. Use a properly fitted, air-purifying or air-fed respirator complying with an approved standard if a risk assessment indicates this is necessary.

Section 9. Physical and chemical properties

Appearance

Physical state	:	Liquid.
Color	:	Not available.
Odor	:	Not available.
Odor threshold	:	Not available.
pH	:	Not available.
Melting point	:	Not available.
Boiling point	:	>37.78°C (>100°F)
Flash point	:	Closed cup: 17.78°C (64°F)
Auto-ignition temperature	:	Not available.
Decomposition temperature	:	Not available.
Flammability (solid, gas)	:	Not available.
Lower and upper explosive (flammable) limits	:	Not available.
Evaporation rate	:	Not available.
Vapor pressure	:	Not available.
Vapor density	:	Not available.
Relative density	:	0.92
Density (lbs / gal)	:	7.68
Solubility	:	Insoluble in the following materials: cold water.
Partition coefficient: n-octanol/water	:	Not available.
Viscosity	:	Kinematic (40°C (104°F)): >0.21 cm^2/s (>21 cSt)
Volatility	:	72% (v/v), 66.896% (w/w)
% Solid. (w/w)	:	33.104

Section 10. Stability and reactivity

Reactivity	:	No specific test data related to reactivity available for this product or its ingredients.
Chemical stability	:	The product is stable.
Possibility of hazardous reactions	:	Under normal conditions of storage and use, hazardous reactions will not occur.
Conditions to avoid	:	When exposed to high temperatures may produce hazardous decomposition products. Refer to protective measures listed in sections 7 and 8.
Incompatible materials	:	Keep away from the following materials to prevent strong exothermic reactions: oxidizing agents, strong alkalis, strong acids.
Hazardous decomposition products	:	Decomposition products may include the following materials: carbon monoxide, carbon dioxide, smoke, oxides of nitrogen.

Section 11. Toxicological information

Information on toxicological effects

Acute toxicity

Product/ingredient name	Result	Species	Dose	Exposure
Isopropyl alcohol	LC50 Inhalation Vapor	Rat	72600 mg/m³	4 hours
	LD50 Dermal	Rabbit	12800 mg/kg	-
	LD50 Oral	Rat	5045 mg/kg	-
1-methoxy-2-propanol	LD50 Dermal	Rabbit	13 g/kg	-
	LD50 Oral	Rat	5.2 g/kg	-
isobutyl acetate	LD50 Dermal	Rabbit	>17400 mg/kg	-
	LD50 Oral	Rat	13400 mg/kg	-
n-butyl acetate	LC50 Inhalation Vapor	Rat	>21.1 mg/l	4 hours
	LC50 Inhalation Vapor	Rat	2000 ppm	4 hours
	LD50 Dermal	Rabbit	>17600 mg/kg	-
	LD50 Oral	Rat	10.768 g/kg	-
Solvent naphtha (petroleum), light aromatic	LD50 Dermal	Rabbit	3.48 g/kg	-
	LD50 Oral	Rat	8400 mg/kg	-
butan-1-ol	LC50 Inhalation Vapor	Rat	24000 mg/m³	4 hours
	LC50 Inhalation Vapor	Rat	8000 ppm	4 hours
	LD50 Dermal	Rabbit	3400 mg/kg	-
	LD50 Oral	Rat	790 mg/kg	-
1,2,4-trimethylbenzene	LC50 Inhalation Vapor	Rat	18000 mg/m³	4 hours
	LD50 Oral	Rat	5 g/kg	-
toluene	LC50 Inhalation Vapor	Rat	49 g/m³	4 hours
	LD50 Dermal	Rabbit	8.39 g/kg	-
	LD50 Oral	Rat	5580 mg/kg	-
Naphtha (petroleum), hydrotreated heavy	LD50 Dermal	Rabbit	>5000 mg/kg	-
	LD50 Oral	Rat	>6 g/kg	-

Conclusion/Summary : There are no data available on the mixture itself.

Irritation/Corrosion

Conclusion/Summary

Skin : There are no data available on the mixture itself.

Eyes : There are no data available on the mixture itself.

Respiratory : There are no data available on the mixture itself.

Sensitization

Conclusion/Summary

Skin : There are no data available on the mixture itself.

Respiratory : There are no data available on the mixture itself.

Mutagenicity

Conclusion/Summary : There are no data available on the mixture itself.

Carcinogenicity

Conclusion/Summary : There are no data available on the mixture itself.

Classification

Section 11. Toxicological information

Product/ingredient name	OSHA	IARC	NTP
Isopropyl alcohol	-	3	-
toluene	-	3	-

Carcinogen Classification code:

IARC: 1, 2A, 2B, 3, 4
NTP: Known to be a human carcinogen; Reasonably anticipated to be a human carcinogen
OSHA: +
Not listed/not regulated: -

Reproductive toxicity

Conclusion/Summary : There are no data available on the mixture itself.

Teratogenicity

Conclusion/Summary : There are no data available on the mixture itself.

Specific target organ toxicity (single exposure)

Name	Category	Route of exposure	Target organs
Isopropyl alcohol	Category 3	-	Narcotic effects
1-methoxy-2-propanol	Category 3	-	Narcotic effects
isobutyl acetate	Category 3	-	Respiratory tract irritation
n-butyl acetate	Category 3	-	Narcotic effects
Solvent naphtha (petroleum), light aromatic	Category 3	-	Respiratory tract irritation
	Category 3		Narcotic effects
butan-1-ol	Category 3	-	Respiratory tract irritation
	Category 3		Narcotic effects
1,2,4-trimethylbenzene	Category 3	-	Respiratory tract irritation
toluene	Category 3	-	Narcotic effects
Naphtha (petroleum), hydrotreated heavy	Category 3	-	Respiratory tract irritation

Specific target organ toxicity (repeated exposure)

Name	Category	Route of exposure	Target organs
toluene	Category 2	-	-

Target organs : Contains material which causes damage to the following organs: brain, central nervous system (CNS).
Contains material which may cause damage to the following organs: blood, kidneys, lungs, the reproductive system, liver, heart, spleen, upper respiratory tract, skin, ears, eye, lens or cornea.

Aspiration hazard

Section 11. Toxicological information

Name	Result
Solvent naphtha (petroleum), light aromatic	ASPIRATION HAZARD - Category 1
toluene	ASPIRATION HAZARD - Category 1
Naphtha (petroleum), hydrotreated heavy	ASPIRATION HAZARD - Category 1

Information on the likely routes of exposure

Potential acute health effects

Eye contact : Causes serious eye damage.

Inhalation : Can cause central nervous system (CNS) depression. May cause drowsiness or dizziness. May cause respiratory irritation.

Skin contact : Defatting to the skin. May cause skin dryness and irritation.

Ingestion : Can cause central nervous system (CNS) depression.

Over-exposure signs/symptoms

Eye contact : Adverse symptoms may include the following:
pain
watering
redness

Inhalation : Adverse symptoms may include the following:
respiratory tract irritation
coughing
nausea or vomiting
headache
drowsiness/fatigue
dizziness/vertigo
unconsciousness
reduced fetal weight
increase in fetal deaths
skeletal malformations

Skin contact : Adverse symptoms may include the following:
pain or irritation
redness
dryness
cracking
blistering may occur
reduced fetal weight
increase in fetal deaths
skeletal malformations

Ingestion : Adverse symptoms may include the following:
stomach pains
reduced fetal weight
increase in fetal deaths
skeletal malformations

Delayed and immediate effects and also chronic effects from short and long term exposure

Conclusion/Summary : There are no data available on the mixture itself. Can form nitrosamines in the presence of certain organic materials and if heated. Exposure to component solvent vapor concentrations in excess of the stated occupational exposure limit may result in adverse health effects such as mucous membrane and respiratory system irritation and adverse effects on the kidneys, liver and central nervous system. Symptoms and signs include headache, dizziness, fatigue, muscular weakness, drowsiness and, in extreme cases, loss of consciousness. Solvents may cause some of the above effects by absorption through the skin. There is some evidence that repeated exposure to organic

Section 11. Toxicological information

solvent vapors in combination with constant loud noise can cause greater hearing loss than expected from exposure to noise alone. If splashed in the eyes, the liquid may cause irritation and reversible damage. Ingestion may cause nausea, diarrhea and vomiting. This takes into account, where known, delayed and immediate effects and also chronic effects of components from short-term and long-term exposure by oral, inhalation and dermal routes of exposure and eye contact.

Short term exposure

Potential immediate effects : There are no data available on the mixture itself.

Potential delayed effects : There are no data available on the mixture itself.

Long term exposure

Potential immediate effects : There are no data available on the mixture itself.

Potential delayed effects : There are no data available on the mixture itself.

Potential chronic health effects

General : May cause damage to organs through prolonged or repeated exposure. Prolonged or repeated contact can defat the skin and lead to irritation, cracking and/or dermatitis.

Carcinogenicity : No known significant effects or critical hazards.

Mutagenicity : No known significant effects or critical hazards.

Teratogenicity : Suspected of damaging the unborn child.

Developmental effects : No known significant effects or critical hazards.

Fertility effects : No known significant effects or critical hazards.

Numerical measures of toxicity

Acute toxicity estimates

Product/ingredient name	Oral (mg/kg)	Dermal (mg/kg)	Inhalation (gases) (ppm)	Inhalation (vapors) (mg/l)	Inhalation (dusts and mists) (mg/l)
EPOXY PRIMER CATALYST	9762.6	36192.7	N/A	357.9	29.8
Isopropyl alcohol	5045	12800	N/A	72.6	N/A
1-methoxy-2-propanol	5200	13000	N/A	N/A	N/A
isobutyl acetate	13400	N/A	N/A	N/A	N/A
n-butyl acetate	10768	N/A	N/A	N/A	N/A
Solvent naphtha (petroleum), light aromatic	8400	3480	N/A	N/A	N/A
butan-1-ol	790	3400	N/A	24	N/A
1,2,4-trimethylbenzene	5000	N/A	N/A	18	1.5
toluene	5580	8390	N/A	49	N/A

Section 12. Ecological information

Toxicity

Section 12. Ecological information

Product/ingredient name	Result	Species	Exposure
Isopropyl alcohol	Acute EC50 10100 mg/l Fresh water	Daphnia - Daphnia magna	48 hours
1-methoxy-2-propanol	Acute LC50 23300 mg/l	Daphnia	48 hours
	Acute LC50 >4500 mg/l Fresh water	Fish	96 hours
n-butyl acetate	Acute LC50 18 mg/l	Fish	96 hours
Solvent naphtha (petroleum), light aromatic	Acute LC50 8.2 mg/l	Fish	96 hours
butan-1-ol	Acute LC50 1376 mg/l	Fish	96 hours

Persistence and degradability

Product/ingredient name	Test	Result	Dose	Inoculum
n-butyl acetate	TEPA and OECD 301D	83 % - Readily - 28 days	-	-

Product/ingredient name	Aquatic half-life	Photolysis	Biodegradability
n-butyl acetate	-	-	Readily
toluene	-	-	Readily

Bioaccumulative potential

Product/ingredient name	$LogP_{ow}$	BCF	Potential
Isopropyl alcohol	0.05	-	low
isobutyl acetate	1.78	-	low
n-butyl acetate	1.78	-	low
butan-1-ol	0.88	-	low
1,2,4-trimethylbenzene	3.63	120.23	low
toluene	2.73	8.32	low

Mobility in soil

Soil/water partition coefficient (K_{OC}) : Not available.

Section 13. Disposal considerations

Disposal methods : The generation of waste should be avoided or minimized wherever possible. Disposal of this product, solutions and any by-products should at all times comply with the requirements of environmental protection and waste disposal legislation and any regional local authority requirements. Dispose of surplus and non-recyclable products via a licensed waste disposal contractor. Waste should not be disposed of untreated to the sewer unless fully compliant with the requirements of all authorities with jurisdiction. Waste packaging should be recycled. Incineration or landfill should only be considered when recycling is not feasible. This material and its container must be disposed of in a safe way. Care should be taken when handling emptied containers that have not been cleaned or rinsed out. Empty containers or liners may retain some product residues. Vapor from product residues may create a highly flammable or explosive atmosphere inside the container. Do not cut, weld or grind used containers unless they have been cleaned thoroughly internally. Avoid dispersal of spilled material and runoff and contact

Section 13. Disposal considerations

with soil, waterways, drains and sewers.

Disposal should be in accordance with applicable regional, national and local laws and regulations.

Refer to Section 7: HANDLING AND STORAGE and Section 8: EXPOSURE CONTROLS/PERSONAL PROTECTION for additional handling information and protection of employees. Section 6. Accidental release measures

14. Transport information

	DOT	IMDG	IATA
UN number	UN1263	UN1263	UN1263
UN proper shipping name	PAINT	PAINT	PAINT
Transport hazard class (es)	3	3	3
Packing group	II	II	II
Environmental hazards	No.	No.	No.
Marine pollutant substances	Not applicable.	Not applicable.	Not applicable.
Product RQ (lbs)	32084.7	Not applicable.	Not applicable.
RQ substances	(isobutyl acetate)	Not applicable.	Not applicable.

Additional information

DOT : Package sizes shipped in quantities less than the product reportable quantity are not subject to the RQ (reportable quantity) transportation requirements.

IMDG : None identified.

IATA : None identified.

Special precautions for user : **Transport within user's premises:** always transport in closed containers that are upright and secure. Ensure that persons transporting the product know what to do in the event of an accident or spillage.

Transport in bulk according to IMO instruments : Not applicable.

Section 15. Regulatory information

United States

United States inventory (TSCA 8b) : All components are active or exempted.

U.S. Federal regulations :

SARA 302/304

SARA 304 RQ : Not applicable.

Composition/information on ingredients

No products were found.

SARA 311/312

Section 15. Regulatory information

Classification : FLAMMABLE LIQUIDS - Category 2
SERIOUS EYE DAMAGE - Category 1
TOXIC TO REPRODUCTION - Category 2
SPECIFIC TARGET ORGAN TOXICITY (SINGLE EXPOSURE) (Respiratory tract irritation) - Category 3
SPECIFIC TARGET ORGAN TOXICITY (SINGLE EXPOSURE) (Narcotic effects) - Category 3
SPECIFIC TARGET ORGAN TOXICITY (REPEATED EXPOSURE) - Category 2
HNOC - Defatting irritant

Composition/information on ingredients

Name	%	Classification
isopropyl alcohol	≥10 - ≤20	FLAMMABLE LIQUIDS - Category 2 EYE IRRITATION - Category 2A SPECIFIC TARGET ORGAN TOXICITY (SINGLE EXPOSURE) (Narcotic effects) - Category 3
1-methoxy-2-propanol	≥10 - ≤20	FLAMMABLE LIQUIDS - Category 3 SPECIFIC TARGET ORGAN TOXICITY (SINGLE EXPOSURE) (Narcotic effects) - Category 3
isobutyl acetate	≥10 - ≤20	FLAMMABLE LIQUIDS - Category 2 SPECIFIC TARGET ORGAN TOXICITY (SINGLE EXPOSURE) (Respiratory tract irritation) - Category 3 HNOC - Defatting irritant
n-butyl acetate	≥5.0 - ≤10	FLAMMABLE LIQUIDS - Category 2 SPECIFIC TARGET ORGAN TOXICITY (SINGLE EXPOSURE) (Narcotic effects) - Category 3 HNOC - Defatting irritant
Solvent naphtha (petroleum), light aromatic	≥1.0 - ≤5.0	FLAMMABLE LIQUIDS - Category 3 SPECIFIC TARGET ORGAN TOXICITY (SINGLE EXPOSURE) (Respiratory tract irritation) - Category 3 SPECIFIC TARGET ORGAN TOXICITY (SINGLE EXPOSURE) (Narcotic effects) - Category 3 ASPIRATION HAZARD - Category 1 HNOC - Defatting irritant
butan-1-ol	≥1.0 - ≤5.0	FLAMMABLE LIQUIDS - Category 3 ACUTE TOXICITY (oral) - Category 4 SKIN IRRITATION - Category 2 SERIOUS EYE DAMAGE - Category 1 SPECIFIC TARGET ORGAN TOXICITY (SINGLE EXPOSURE) (Respiratory tract irritation) - Category 3 SPECIFIC TARGET ORGAN TOXICITY (SINGLE EXPOSURE) (Narcotic effects) - Category 3 HNOC - Defatting irritant
1,2,4-trimethylbenzene	≥0.10 - ≤2.7	FLAMMABLE LIQUIDS - Category 3 ACUTE TOXICITY (inhalation) - Category 4 SKIN IRRITATION - Category 2 EYE IRRITATION - Category 2A SPECIFIC TARGET ORGAN TOXICITY (SINGLE EXPOSURE) (Respiratory tract irritation) - Category 3 HNOC - Defatting irritant
toluene	≤1.8	FLAMMABLE LIQUIDS - Category 2 SKIN IRRITATION - Category 2

Section 15. Regulatory information

Naphtha (petroleum), hydrotreated heavy	≥1.0 - ≤5.0	TOXIC TO REPRODUCTION - Category 2 SPECIFIC TARGET ORGAN TOXICITY (SINGLE EXPOSURE) (Narcotic effects) - Category 3 SPECIFIC TARGET ORGAN TOXICITY (REPEATED EXPOSURE) - Category 2 ASPIRATION HAZARD - Category 1 HNOC - Defatting irritant FLAMMABLE LIQUIDS - Category 4 EYE IRRITATION - Category 2A SPECIFIC TARGET ORGAN TOXICITY (SINGLE EXPOSURE) (Respiratory tract irritation) - Category 3 ASPIRATION HAZARD - Category 1 HNOC - Defatting irritant

SARA 313

Supplier notification :

Chemical name	CAS number	Concentration
butan-1-ol	71-36-3	1 - 5
1,2,4-trimethylbenzene	95-63-6	1 - 5
toluene	108-88-3	0.5 - 1.5

SARA 313 notifications must not be detached from the SDS and any copying and redistribution of the SDS shall include copying and redistribution of the notice attached to copies of the SDS subsequently redistributed.

Additional environmental information is contained on the Environmental Data Sheet for this product, which can be obtained from your PPG representative.

California Prop. 65

⚠ **WARNING**: Reproductive Harm - www.P65Warnings.ca.gov.

Section 16. Other information

Hazardous Material Information System (U.S.A.)

Health : 3 * **Flammability** : 3 **Physical hazards** : 0

(*) - Chronic effects

Caution: HMIS® ratings are based on a 0-4 rating scale, with 0 representing minimal hazards or risks, and 4 representing significant hazards or risks. Although HMIS® ratings and the associated label are not required on MSDSs or products leaving a facility under 29 CFR 1910.1200, the preparer may choose to provide them. HMIS® ratings are to be used with a fully implemented HMIS® program. HMIS® is a registered trademark and service mark of the American Coatings Association, Inc.

The customer is responsible for determining the PPE code for this material. For more information on HMIS® Personal Protective Equipment (PPE) codes, consult the HMIS® Implementation Manual.

National Fire Protection Association (U.S.A.)

Health : 3 **Flammability** : 3 **Instability** : 0

Date of previous issue : **6/2/2019**

Organization that prepared the MSDS : EHS

Section 16. Other information

Key to abbreviations : ATE = Acute Toxicity Estimate
BCF = Bioconcentration Factor
GHS = Globally Harmonized System of Classification and Labelling of Chemicals
IATA = International Air Transport Association
IBC = Intermediate Bulk Container
IMDG = International Maritime Dangerous Goods
LogPow = logarithm of the octanol/water partition coefficient
MARPOL = International Convention for the Prevention of Pollution From Ships, 1973 as modified by the Protocol of 1978. ("Marpol" = marine pollution)
N/A = Not available
SGG = Segregation Group
UN = United Nations

◤ **Indicates information that has changed from previously issued version.**

Disclaimer

The information contained in this data sheet is based on present scientific and technical knowledge. The purpose of this information is to draw attention to the health and safety aspects concerning the products supplied by PPG, and to recommend precautionary measures for the storage and handling of the products. No warranty or guarantee is given in respect of the properties of the products. No liability can be accepted for any failure to observe the precautionary measures described in this data sheet or for any misuse of the products.

ENVIROBASE®
HIGH PERFORMANCE

Product Information

EC520 En-V® High Production Clearcoat

Product Description

EC520 **En-V®** High Production Clearcoat is engineered specifically for use with ENVIROBASE® High Performance Waterborne Basecoat. This clearcoat utilizes the ***En-V*** Resin technology to meet the throughput demands of any shop while delivering a premium appearance and excellent gloss retention. EC520 is ideal for 1-4 panel repairs with ease of application built into the design, consistent with the characteristics of every ***En-V*** clearcoat. EC520 ***En-V*** High Production Clearcoat is compliant in all North American refinish markets.

Preparation of Substrate

- Wash all surfaces to be painted with soap and water, then apply the appropriate ONECHOICE®, GLOBAL REFINISH SYSTEM® or DELTRON® cleaner. Ensure that the substrate is thoroughly cleaned and dried both before and after application work.
- Wet sand with US 500 - 600 / European P800 - P1200 grade paper or dry sanding with US 400 - 500 / European P600 - P800 grade paper.
- Wash off residue and dry thoroughly before re-cleaning with appropriate cleaner. The use of a SX1070 *OneChoice* tack rag is recommended.

APPLICATION GUIDE:

Mixing Ratio for EC520 *En-V* High Production Clearcoat

EC520:	3 parts
ECH5075:	1 part
ECRxx/DT18xx/D87xx:	1 part
Pot Life at 70°F (21°C):	45 minutes

Hardener:
ECH5075 Standard Hardener

Reducer:

ECR65	Low Temp Reducer	DT1845	Compliant Reducer Normal
ECR75	Mid Temp Reducer	DT1850	Compliant Reducer Medium
ECR85	High Temp Reducer	DT1855	Compliant Reducer Slow
ECR98	Hot and Humid Ultra High Temp Reducer	D8764	Fast Compliant Thinner
		D8774	Medium Compliant Thinner
See reducer selection guide on page 4 for additional information		D8767	Slow Complaint Thinner

ECR98 is the required retarder for all markets.

Optional Additives:

SLV814 Universal Flexibilizer:	add 10% to RTS volume
SL93LV Accelerator	add 2% to RTS volume
SLV73 Fisheye Eliminator:	add 1 oz. to RTS quart

SLV814 Universal Flexibilizer is recommended not required for plastic parts

Spray Gun Set-up and Pressure:

Fluid Tip:	1.2 - 1.4 mm
Spray Viscosity:	14 - 15 secs DIN4 at 70°F (21°C)
HVLP:	10 maximum psi at the cap
Compliant:	29 - 40 psi at the gun

Note: Refer to the spray gun manufacturer's recommendations for optimum inlet air pressures.

Application:

Apply:	2 medium wet coats.

Film Build:

Minimum dry film build:	2.0 mils
Maximum dry film build:	3.5 mils
Recommended wet film build per coat:	2.0 - 2.5 mils
Recommended dry film build per coat:	1.0 - 1.5 mils

Flash Off at 70°F (21°C):

Flash:	3 - 5 minutes between coats

Drying Times:

Dust-free: 70°F (21°C)	30 - 35 minutes
Air Dry to Re-assemble: 70°F (21°C)	1.5 - 2 hours
Force Dry:	
120°F (49°C)	20 minutes
140°F (60°C)	15 minutes - *minimize metal temperatures exceeding 140°F (60°C)*
Tape Time: 70°F (21°C)	1.5 - 2.5 hours
IR (Infrared):	NA

All force dry times are quoted for metal temperature. Additional time must be allowed during force dry to allow metal to reach recommended temperature.

Overcoat / Recoat / Polishing:

Overcoat/Recoat Time: 2 hours after recommended air dry or force dry bake cycle.

Re-Repair: Re-repair area must be sanded appropriately before recoating with primer, color or clearcoat

Overcoat with: *Envirobase* High Performance primer, color or clearcoat.

Polishing: After recommended air dry or force dry and cool down, minor dirt nibs can be removed. Sand with P1500 or finer and follow normal polishing procedures.

Performance Guidelines:

Allow basecoat to thoroughly dry before applying EC520 ***En-V*** High Production Clearcoat. If allowed to dry longer than 24 hours, additional basecoat must be applied before clearcoating. The timing will depend on film thickness, temperature and humidity.

Technical Data:

RTS Combinations	**EC520 : ECH5075 : ECRxx/DT18xx/ D87xx**	**EC520 : ECH5075 : ECRxx/DT18xx/ D87xx + SLV814** *Flex Additive*	**EC520 : ECH5075 : ECRxx/DT18xx/ D87xx + SL93LV** *Accelerator*	**EC520: ECH5075 : ECRxx/DT18xx/ D87xx + SLV73** *Fisheye Eliminator*
Applicable Use Category	Clear Coating	Clear Coating (Flexed)	Clear Coating	Clear Coating
Weight Ratio:	3 : 1 : 1	3 : 1 : 1 +10%	3 : 1 : 1 +2%	3: 1 : 1 + 1 oz. RTS qt.
VOC Actual (g/L)	58 - 153	56 - 145	56 - 152	56 - 150
VOC Actual (lbs./ US gal.)	0.48 - 1.28	0.47 - 1.21	0.47 - 1.27	0.47 - 1.25
VOC Regulatory (less water, less exempt (g/L)	114 - 248	114 - 242	113 - 249	114 - 248
VOC Regulatory (less water, less exempt (lbs./ US gal.)	0.95 - 2.07	0.95 - 2.02	0.94 - 2.08	0.95 - 2.07
Density (g/L)	1,117 - 1,176	1,125 - 1,180	1,121 - 1,178	1,119 - 1,176
Density (lbs./ US gal)	9.32 - 9.81	9.39 - 9.85	9.36 - 9.83	9.34 - 9.81
Volatiles wt.%	56.0 - 58.3	57.4 - 59.8	57.0 - 59.2	57.1 - 59.6
Water wt.%	0.0	0.0	0.0	0
Exempt wt.%	42.2 - 53.3	44.6 - 54.9	43.4 - 54.3	43.8 - 54.7
Water vol.%	0.0	0.0	0.0	0
Exempt vol.%	38.0 - 49.1	39.9 - 50.5	38.8 - 50.1	39.4 - 50.6
RTS Solids vol.%	43.9 - 44.0	42.9 - 3.0	43.2 - 43.3	42.8 - 42.9
RTS Solids wt.%	41.7 - 44.0	40.2 - 42.6	40.8 - 43.1	40.4 - 43.0
Sq. Ft. Coverage at 1 mil. at 100% transfer efficiency	704 - 706	688 - 690	693 - 695	687 - 688

EC520 En-V High Production Clearcoat Reducer Selection Guide

Higher Air Movement
Temperature and Humidity
(Larger)

Average Air Flow & Humidity
12,000-24,000 CFM - 30%-90% RH

Lower Air Movement
Temperature and Humidity
(Smaller)

EC520 ***En-V*** High Production Clearcoat Reducer Selection Guide

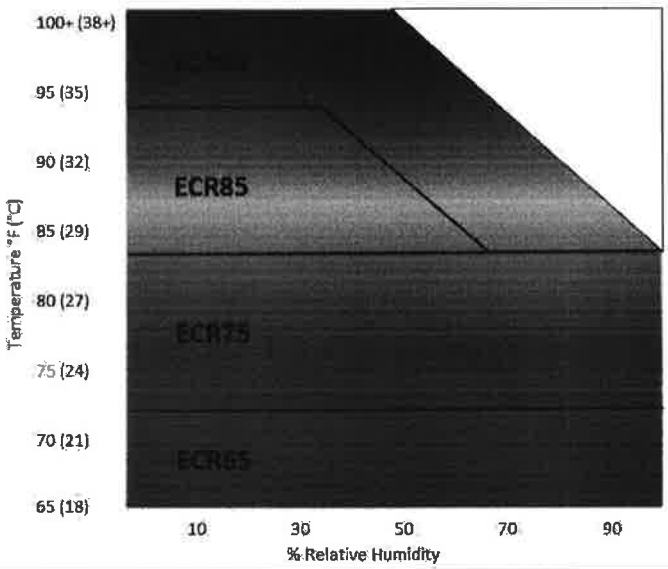

For Repairs greater than 3 panels consider using the next higher temperature reducer

Temperature, Air Flow, Humidity and Size of the Repair will affect Reducer selection

HEALTH AND SAFETY

See Material Safety Data Sheet and Labels for additional safety information and handling instructions.

- The contents of this package may have to be blended with other components before the product can be used. Before opening the packages, be sure you understand the warning messages on the labels and MSDS of all the components, since the mixture will have the hazards of all its parts.
- Improper handling and use, for example, poor spray technique, inadequate engineering controls and/or lack of proper Personal Protective Equipment (PPE), may result in hazardous conditions or injury.
- Follow spray equipment manufacturer's instructions to prevent personal injury or fire.
- Provide adequate ventilation for health and fire hazard control.
- Follow company policy, product MSDS and respirator manufacturer's recommendations for selection and proper use of respiratory protection. Be sure employees are adequately trained on the safe use of respirators per company and regulatory requirements.
- Wear appropriate PPE such as eye and skin protection. In the event of injury, see first aid procedures on MSDS.
- Store waterborne and solvent borne waste separately. A competent agent with appropriate certification must handle all waterborne wastes. Wastes must be disposed in accordance with all Federal, State, Provincial and local laws and regulations.
- Always observe all applicable precautions and follow good safety and hygiene practices.

Emergency Medical or Spill Control Information: (412) 434-4515; In Canada (514) 645-1320

Materials described are designed for application by professional, trained personnel using proper equipment and are not intended for sale to the general public. Products mentioned may be hazardous and should only be used according to directions, while observing precautions and warning statements listed on label. Statements and methods described are based upon the best information and practices known to PPG Industries. Procedures for applications mentioned are suggestions only and are not to be construed as representations or warranties as to performance, result, or fitness for any intended use, nor does PPG Industries warrant freedom from patent infringement in the use of any formula or process set forth herein.

We protect and beautify the world™

PPG Automotive Refinish
19699 Progress Drive
Strongsville, OH 44149
800.647.6050

PPG Canada Inc.
2301 Royal Windsor Drive, Unit #6
Mississauga, Ontario L5J 1K5
888.310.4762

Follow us online:

www.ppgrefinish.com

© 2018 PPG Industries, Inc. All rights reserved
Deltron, En-V, Envirobase, Global Refinish System, OneChoice, PaintManager and the *PPG* Logo are registered trademarks and *We protect and beautify the world* is a trademark of PPG Industries Ohio, Inc.

DPLF Epoxy Primer

P-196

DPLF

DPLF Epoxy Primer is an excellent corrosion-resistant primer and provides excellent adhesion to many types of properly prepared metal, fiberglass and aluminum substrates, as well as plastic fillers.

DPLF Epoxy Primer may also be used as a sealer and topcoated with most PPG Refinish products.

DPLF Epoxy Primers come in 5 colors:
DP40LF (Gray-Green), DP48LF (White), DP50LF (Gray), DP74LF (Red), and DP90LF (Black).

Features & Benefits

- Direct to metal
- Strong corrosion protection
- Excellent adhesion
- Primer / Sealer

Compatible Surfaces

DPLF may be applied over

- Properly cleaned and sanded, steel, galvanized steel, sand blasted steel and aluminum
- Properly cleaned and sanded gel coated fiberglass
- Properly cleaned (unsanded) E-Coat with DP401LF catalyst only
- Various cleaned and sanded rigid plastic*: ABS, Nylon, Polycarbonate, Noryl, PBT SMC, with DP401LF Catalyst only
- Properly cleaned and sanded OEM Finishes - for OE lacquer see ++Caution statement
- Cured and sanded refinish coatings
- DF Body Fillers
- SX Metal Treatments

NOTE: DPLF is direct to metal and MUST NOT be applied over etch or wash primers. Film build of 1.2-1.5 mils of DPLF is required or the surface must be treated with metal treatment/conditioner.

*Unprimed plastics require the use of a plastic adhesion promoter prior to the application of DPLF epoxy primer.
++**Caution** when DPLF is sprayed over lacquer substrates or basecoat that is not cross linked , allow to set overnight before applying another coat of primer or topcoat as lifting may occur. This can be avoided by applying the DPLF Epoxy Primer, color and clear coating the same day or by catalyzing the basecoat.

Required Products

Catalyst

DP401LF Epoxy Primer Catalyst
DP402LF Epoxy Primer Catalyst
Acetone*

*Optional

DPLF

Surface Preparation:

- Wash the area to be painted with soap and water, then clean with appropriate PPG cleaner.
- Sand the bare metal areas completely with 80-180 grit abrasive. Sand old finishes by hand or machine with 320-400 grit dry or 600 grit wet.
- Re-clean with appropriate PPG cleaner
- Chemical treatment or the use of a conversion coating will enhance the adhesion and performance properties of the finished system.
- Prime aluminum within 8 hours.

Prime carbon steel immediately after cleaning.

Mix Ratio:

DPLF Epoxy Primer	:	DPLF Catalyst	:	(optional) Acetone*
2	:	1	:	½

Note: Thoroughly mix primer and catalyst (5 minutes mechanical agitation recommended).

Allow 30 minutes induction period to obtain maximum performance properties prior to use of DPLF/DP401LF.
No induction period is necessary when using DPLF/DP402LF

Do not blend DP401LF and DP402LF together

Pot Life: DPLF/DP401LF is 72 hours at 70°F (21°C)
DPLF/DP402LF is 8 hours at 70°F (21°C)

Note: In non-automotive applications where higher VOC primers are allowed, one half part of DT reducer may be added. This 2:1:½ blend ratio will result in a 4.90 VOC sealer.

*The use of acetone is optional, however when used, the minimum recommended film build must be maintained.

DPLF Epoxy Primer cannot be tinted.
DPLF Epoxy colors may be blended together.

Painting Flexible Parts:

DPLF Epoxy Primer may be used as a primer sealer on flexible parts over DELTRON® or ONECHOICE® Plastic Adhesion Promoters.

DPLF Epoxy Primer	:	DP401LF	:	Acetone*
2	:	1	:	½

Note: Do not use DP402LF Fast Catalyst on flexible parts.

Apply 1 wet coat.

Recommended Dry Film build: .5-.75 mils
Reductions other than 2:1:½ or more than 1 coat will not result in a flexible coating.

Additives:

None

DPLF

Air Pressure and Spraygun Setup:

HVLP:	8-10 psi at the air cap
Compliant:	29-40 psi at the gun
Gun Setup:	1.3-1.6 mm or equivalent

Note: For best overall results, refer to spraygun manufacturer's recommendations for inlet air pressures.

Application:

	DP401LF	DP402LF
Apply:	1-2 wet coats	1-2 wet coats
Recommended Dry Film Build		
DPLF Epoxy Primer:	0.75-1.5 mils	0.75-1.5 mils
DPLF Epoxy Primer on Flexible parts:	0.5-0.75 mils	not recommended
DPLF Epoxy Primer with Acetone:	0.75-1.5 mils	0.75-1.5 mils

Drying Times:

		DP401LF	DP402LF
Between Coats: At 70°F (21°C)		10-15 minutes	10-15 minutes
Dry to topcoat: At 70°F (21°C)	**1 coat**	60 minutes	30 minutes
	2 coats	90 minutes	60 minutes
	Flexibilized:	30 minutes	NA
To apply body filler: At 70°F (21°C)	**1 coat**	60 minutes	60 minutes
	2 coats	overnight dry	overnight dry

Note: DPLF Epoxy Primer may be recoated any time up to 1 week.
After 1 week, it must be cleaned, sanded and recleaned. Reapply 1 additional coat of DPLF Epoxy Primer only if applying basecoat directly to DPLF

Compatible Topcoats:

DPLF Epoxy Primer may be topcoated with:
DF Body Fillers
CONCEPT® (DCC) Acrylic Urethane
Deltron 2000 (DBC) Basecoat
Deltron primers, surfacers, and sealers
OneChoice surfacers and sealers
GLOBAL REFINISH SYSTEM® Basecoat
Global Refinish System primers, surfacers, and sealers
NEXA AUTOCOLOR® Basecoat
Nexa Autocolor primers, surfacers, and sealers
ENVIROBASE® High Performance Basecoat
Envirobase High Performance primers, surfacers, and sealers
AQUABASE® Plus Basecoat
Aquabase Plus primers, surfacers, and sealers

DPLF

Equipment Cleaning: Spray guns, gun cups, storage pots, etc., should be cleaned thoroughly after each use with any appropriate PPG general purpose solvent.

Technical Data:

DPLF Epoxy Primer	DPXXLF : DP401LF/DP402LF	DPXXLF : DP401LF/DP402LF : Acetone
Volume Ratio:	2 : 1	2 : 1 : 1/2
Applicable Use Category:	Primer Surfacer	Primer Surfacer
VOC Actual (g/L)	537-543	460-465
VOC Actual (lbs./ gal)	4.48-4.53	3.84-3.88
VOC Regulatory (less water, less exempt (g/L)	537-543	534-542
VOC Regulatory (less water, less exempt (lbs./ US gal.)	4.48-4.53	4.46-4.52
Density (g/L)	1198-1272	1140-1203
Density (lbs./ US gal)	10.00-10.61	9.51-10.04
Solids vol. %	35.8-36.9	30.6-31.6
Solids wt. %	55.2-57.3	49.7-51.9
Sq. ft. coverage / US gal. (1 mil. At 100% transfer efficiency)	572-592	490-507
DPLF Epoxy Primer (for flexible parts) Use DP401LF only	**DPXXLF : DP401LF : DT Reducer**	**DPXXLF : DP401LF : Acetone**
Volume Ratio (RTS):	2 : 1 : 1/2	2 : 1 : 1/2
Applicable Use Category:	Sealer Specialty	Sealer Specialty
VOC Actual (g/L)	460-587	460-465
VOC Actual (lbs./ gal)	3.84-4.90	3.84-3.88
VOC Regulatory (less water, less exempt (g/L)	536-587	536-542
VOC Regulatory (less water, less exempt (lbs./ US gal.)	4.47-4.90	4.47-4.52
Density (g/L)	1140-1269	1140-1190
Density (lbs./ US gal)	9.51-10.59	9.51-9.93
Solids vol. %	30.6-31.4	30.6-31.4
Solids wt. %	46.5-51.4	49.7-51.4
Sq. ft. coverage / US gal. (1 mil. At 100% transfer efficiency)	490-504	490-504

See Safety Data Sheet and Labels for additional safety information and handling instructions.

Important: The contents of this package must be blended with other components before the product can be used. Before opening the packages, be sure you understand the warning messages on the labels of all components since the mixture will have the hazards of all its parts. Improper spray technique may result in a hazardous condition. Follow spray equipment manufacturer's instructions to prevent personal injury or fire. Follow directions for respirator use. Wear eye and skin protection. Observe all applicable precautions.

EMERGENCY MEDICAL OR SPILL CONTROL INFORMATION (412) 434-4515; IN CANADA (514) 645-1320

Materials described are designed for application by professional, trained personnel using proper equipment and are not intended for sale to the public. Products mentioned may be hazardous and should only be used according to direction, while observing precautions and warning statements listed on label. Statements and methods described are based upon the best information and practices known to PPG Industries. Procedures for applications mentioned are suggestions only and are not to be construed as representations or warranties as to performance, results, or fitness for any intended use, nor does PPG Industries warrant freedom from patent infringement in the use of any formula or process set forth herein.

PPG Automotive Refinish
19699 Progress Drive
Strongsville, OH 44149
800.647.6050

PPG Canada Inc.
2301 Royal Windsor Drive, Unit #6
Mississauga, Ontario L5J 1K5
888.310.4762

Follow us online:
www.ppgrefinish.com

We protect and beautify the world™

© 2020 PPG Industries, Inc. All rights reserved

The PPG Logo, *Aquabase*, *Concept*, *Deltron*, *Envirobase*, and *Global Refinish System* are registered trademarks and *We protect and beautify the world* is a trademark of PPG Industries of Ohio, Inc.

Rev. 10/20

SAFETY DATA SHEET

Date of issue/Date of revision **15 January 2020**
Version 20

Section 1. Identification

Product name	: NON SANDING EPOXY PRIMER BLACK (LEAD FREE)
Product code	: DP90LF
Other means of identification	: Not available.
Product type	: Liquid.

Relevant identified uses of the substance or mixture and uses advised against

Product use	: Industrial applications.
Use of the substance/ mixture	: Coating. Paints. Painting-related materials.
Uses advised against	: Not applicable.

Manufacturer	: PPG Industries, Inc. One PPG Place, Pittsburgh, PA 15272
Emergency telephone number	: (412) 434-4515 (U.S.) (514) 645-1320 (Canada) 01-800-00-21-400 or + 52 55 5559 1588 (Mexico)
Technical Phone Number	: 1-800-647-6050

Section 2. Hazards identification

OSHA/HCS status	: This material is considered hazardous by the OSHA Hazard Communication Standard (29 CFR 1910.1200).
Classification of the substance or mixture	: FLAMMABLE LIQUIDS - Category 3 ACUTE TOXICITY (inhalation) - Category 4 SKIN IRRITATION - Category 2 EYE IRRITATION - Category 2A SKIN SENSITIZATION - Category 1 CARCINOGENICITY - Category 2 TOXIC TO REPRODUCTION (Unborn child) - Category 2 SPECIFIC TARGET ORGAN TOXICITY (SINGLE EXPOSURE) (Narcotic effects) - Category 3 SPECIFIC TARGET ORGAN TOXICITY (REPEATED EXPOSURE) - Category 2 Percentage of the mixture consisting of ingredient(s) of unknown acute toxicity: 2.9% (Oral), 35.3% (Dermal), 39.8% (Inhalation)

GHS label elements

Section 2. Hazards identification

Hazard pictograms :

Signal word : Warning

Hazard statements : Flammable liquid and vapor.
Harmful if inhaled.
Causes serious eye irritation.
Causes skin irritation.
May cause an allergic skin reaction.
Suspected of damaging the unborn child.
Suspected of causing cancer.
May cause drowsiness or dizziness.
May cause damage to organs through prolonged or repeated exposure.

Precautionary statements

Prevention : Obtain special instructions before use. Do not handle until all safety precautions have been read and understood. Wear protective gloves. Wear eye or face protection. Wear protective clothing. Keep away from heat, hot surfaces, sparks, open flames and other ignition sources. No smoking. Use explosion-proof electrical, ventilating, lighting and all material-handling equipment. Use only non-sparking tools. Take precautionary measures against static discharge. Keep container tightly closed. Use only outdoors or in a well-ventilated area. Do not breathe vapor. Wash hands thoroughly after handling. Contaminated work clothing must not be allowed out of the workplace.

Response : Get medical attention if you feel unwell. IF exposed or concerned: Get medical attention. IF INHALED: Remove person to fresh air and keep comfortable for breathing. Call a POISON CENTER or physician if you feel unwell. IF ON SKIN (or hair): Take off immediately all contaminated clothing. Rinse skin with water or shower. IF ON SKIN: Wash with plenty of soap and water. Wash contaminated clothing before reuse. If skin irritation or rash occurs: Get medical attention. IF IN EYES: Rinse cautiously with water for several minutes. Remove contact lenses, if present and easy to do. Continue rinsing. If eye irritation persists: Get medical attention.

Storage : Store locked up. Store in a well-ventilated place. Keep cool.

Disposal : Dispose of contents and container in accordance with all local, regional, national and international regulations.

Supplemental label elements : Sanding and grinding dusts may be harmful if inhaled. Repeated exposure to high vapor concentrations may cause irritation of the respiratory system and permanent brain and nervous system damage. Inhalation of vapor/aerosol concentrations above the recommended exposure limits causes headaches, drowsiness and nausea and may lead to unconsciousness or death. Avoid contact with skin and clothing. Wash thoroughly after handling. Emits toxic fumes when heated.

Hazards not otherwise classified : Prolonged or repeated contact may dry skin and cause irritation.

Section 3. Composition/information on ingredients

Substance/mixture : Mixture
Product name : NON SANDING EPOXY PRIMER BLACK (LEAD FREE)

Ingredient name	%	CAS number
Epoxy Resin (700<MW<=1100)	≥10 - ≤20	25036-25-3
Limestone	≥10 - ≤20	1317-65-3
barium sulfate	≥10 - ≤20	7727-43-7
heptan-2-one	≥10 - ≤18	110-43-0
2-butoxyethanol	≥1.0 - ≤5.0	111-76-2
toluene	≥1.0 - ≤5.0	108-88-3
xylene	≥1.0 - ≤4.8	1330-20-7
4-methylpentan-2-one	≥1.0 - ≤4.6	108-10-1
Solvent naphtha (petroleum), light aromatic	≥1.0 - ≤4.3	64742-95-6
2-Butenedioic acid (Z)-, dibutyl ester, polymer with chloroethene and 1,2-propanediol mono-2-propenoate	≥1.0 - ≤5.0	114653-42-8
Talc , not containing asbestiform fibres	≥1.0 - ≤3.6	14807-96-6
1,2,4-trimethylbenzene	≥0.10 - ≤2.5	95-63-6
carbon black, respirable powder	≥0.10 - ≤2.5	1333-86-4
ethylbenzene	<1.0	100-41-4

SUB codes represent substances without registered CAS Numbers.

Any concentration shown as a range is to protect confidentiality or is due to batch variation.

There are no additional ingredients present which, within the current knowledge of the supplier and in the concentrations applicable, are classified as hazardous to health or the environment and hence require reporting in this section.

Occupational exposure limits, if available, are listed in Section 8.

Section 4. First aid measures

If ingestion, irritation, any type of overexposure or symptoms of overexposure occur during or persists after use of this product, contact a POISON CONTROL CENTER, EMERGENCY ROOM OR PHYSICIAN immediately; have Safety Data Sheet information available. Never give anything by mouth to an unconscious or convulsing person.

Description of necessary first aid measures

Eye contact : Remove contact lenses, irrigate copiously with clean, fresh water, holding the eyelids apart for at least 10 minutes and seek immediate medical advice.

Inhalation : Remove to fresh air. Keep person warm and at rest. If not breathing, if breathing is irregular or if respiratory arrest occurs, provide artificial respiration or oxygen by trained personnel.

Skin contact : Remove contaminated clothing and shoes. Wash skin thoroughly with soap and water or use recognized skin cleanser. Do NOT use solvents or thinners.

Ingestion : If swallowed, seek medical advice immediately and show this container or label. Keep person warm and at rest. Do NOT induce vomiting.

Most important symptoms/effects, acute and delayed

Potential acute health effects

Eye contact : Causes serious eye irritation.

Inhalation : Harmful if inhaled. Can cause central nervous system (CNS) depression. May cause drowsiness or dizziness.

Section 4. First aid measures

Skin contact : Causes skin irritation. Defatting to the skin. May cause an allergic skin reaction.
Ingestion : Can cause central nervous system (CNS) depression.

Over-exposure signs/symptoms

Eye contact : Adverse symptoms may include the following:
pain or irritation
watering
redness

Inhalation : Adverse symptoms may include the following:
nausea or vomiting
headache
drowsiness/fatigue
dizziness/vertigo
unconsciousness
reduced fetal weight
increase in fetal deaths
skeletal malformations

Skin contact : Adverse symptoms may include the following:
irritation
redness
dryness
cracking
reduced fetal weight
increase in fetal deaths
skeletal malformations

Ingestion : Adverse symptoms may include the following:
reduced fetal weight
increase in fetal deaths
skeletal malformations

Indication of immediate medical attention and special treatment needed, if necessary

Notes to physician : Treat symptomatically. Contact poison treatment specialist immediately if large quantities have been ingested or inhaled.
Specific treatments : No specific treatment.
Protection of first-aiders : No action shall be taken involving any personal risk or without suitable training. If it is suspected that fumes are still present, the rescuer should wear an appropriate mask or self-contained breathing apparatus. It may be dangerous to the person providing aid to give mouth-to-mouth resuscitation. Wash contaminated clothing thoroughly with water before removing it, or wear gloves.

See toxicological information (Section 11)

Section 5. Fire-fighting measures

Extinguishing media

Suitable extinguishing media : Use dry chemical, CO_2, water spray (fog) or foam.
Unsuitable extinguishing media : Do not use water jet.

Section 5. Fire-fighting measures

Specific hazards arising from the chemical : Flammable liquid and vapor. In a fire or if heated, a pressure increase will occur and the container may burst, with the risk of a subsequent explosion. Runoff to sewer may create fire or explosion hazard. This material is toxic to aquatic life with long lasting effects. Fire water contaminated with this material must be contained and prevented from being discharged to any waterway, sewer or drain.

Hazardous thermal decomposition products : Decomposition products may include the following materials:
carbon oxides
sulfur oxides
phosphorus oxides
halogenated compounds
metal oxide/oxides

Special protective actions for fire-fighters : Promptly isolate the scene by removing all persons from the vicinity of the incident if there is a fire. No action shall be taken involving any personal risk or without suitable training. Move containers from fire area if this can be done without risk. Use water spray to keep fire-exposed containers cool.

Special protective equipment for fire-fighters : Fire-fighters should wear appropriate protective equipment and self-contained breathing apparatus (SCBA) with a full face-piece operated in positive pressure mode.

Section 6. Accidental release measures

Personal precautions, protective equipment and emergency procedures

For non-emergency personnel : No action shall be taken involving any personal risk or without suitable training. Evacuate surrounding areas. Keep unnecessary and unprotected personnel from entering. Do not touch or walk through spilled material. Shut off all ignition sources. No flares, smoking or flames in hazard area. Avoid breathing vapor or mist. Provide adequate ventilation. Wear appropriate respirator when ventilation is inadequate. Put on appropriate personal protective equipment.

For emergency responders : If specialized clothing is required to deal with the spillage, take note of any information in Section 8 on suitable and unsuitable materials. See also the information in "For non-emergency personnel".

Environmental precautions : Avoid dispersal of spilled material and runoff and contact with soil, waterways, drains and sewers. Inform the relevant authorities if the product has caused environmental pollution (sewers, waterways, soil or air).

Methods and materials for containment and cleaning up

Small spill : Stop leak if without risk. Move containers from spill area. Use spark-proof tools and explosion-proof equipment. Dilute with water and mop up if water-soluble. Alternatively, or if water-insoluble, absorb with an inert dry material and place in an appropriate waste disposal container. Dispose of via a licensed waste disposal contractor.

Large spill : Stop leak if without risk. Move containers from spill area. Use spark-proof tools and explosion-proof equipment. Approach release from upwind. Prevent entry into sewers, water courses, basements or confined areas. Wash spillages into an effluent treatment plant or proceed as follows. Contain and collect spillage with non-combustible, absorbent material e.g. sand, earth, vermiculite or diatomaceous earth and place in container for disposal according to local regulations (see Section 13). Dispose of via a licensed waste disposal contractor. Contaminated absorbent material may pose the same hazard as the spilled product. Note: see Section 1 for emergency contact information and Section 13 for waste disposal.

Section 7. Handling and storage

Precautions for safe handling

Protective measures : Put on appropriate personal protective equipment (see Section 8). Persons with a history of skin sensitization problems should not be employed in any process in which this product is used. Avoid exposure - obtain special instructions before use. Avoid exposure during pregnancy. Do not handle until all safety precautions have been read and understood. Do not get in eyes or on skin or clothing. Do not breathe vapor or mist. Do not ingest. Use only with adequate ventilation. Wear appropriate respirator when ventilation is inadequate. Do not enter storage areas and confined spaces unless adequately ventilated. Keep in the original container or an approved alternative made from a compatible material, kept tightly closed when not in use. Store and use away from heat, sparks, open flame or any other ignition source. Use explosion-proof electrical (ventilating, lighting and material handling) equipment. Use only non-sparking tools. Take precautionary measures against electrostatic discharges. Empty containers retain product residue and can be hazardous. Do not reuse container.

Special precautions : If this material is part of a multiple component system, read the Safety Data Sheet(s) for the other component or components before blending as the resulting mixture may have the hazards of all of its parts.

Advice on general occupational hygiene : Eating, drinking and smoking should be prohibited in areas where this material is handled, stored and processed. Workers should wash hands and face before eating, drinking and smoking. Remove contaminated clothing and protective equipment before entering eating areas. See also Section 8 for additional information on hygiene measures.

Conditions for safe storage, including any incompatibilities : Do not store below the following temperature: 5°C (41°F). Store in accordance with local regulations. Store in a segregated and approved area. Store in original container protected from direct sunlight in a dry, cool and well-ventilated area, away from incompatible materials (see Section 10) and food and drink. Store locked up. Eliminate all ignition sources. Separate from oxidizing materials. Keep container tightly closed and sealed until ready for use. Containers that have been opened must be carefully resealed and kept upright to prevent leakage. Do not store in unlabeled containers. Use appropriate containment to avoid environmental contamination.

Section 8. Exposure controls/personal protection

Control parameters

Occupational exposure limits

Ingredient name	Exposure limits
Epoxy Resin (700<MW<=1100)	None.
Limestone	**OSHA PEL (United States, 5/2018).** TWA: 5 mg/m³ 8 hours. Form: Respirable fraction TWA: 15 mg/m³ 8 hours. Form: Total dust
barium sulfate	**ACGIH TLV (United States, 3/2019).** TWA: 5 mg/m³ 8 hours. Form: Inhalable fraction **OSHA PEL (United States, 5/2018).** TWA: 5 mg/m³ 8 hours. Form: Respirable fraction TWA: 15 mg/m³ 8 hours. Form: Total dust
heptan-2-one	**ACGIH TLV (United States, 3/2019).**

Section 8. Exposure controls/personal protection

	TWA: 233 mg/m³ 8 hours. TWA: 50 ppm 8 hours. **OSHA PEL (United States, 5/2018).** TWA: 465 mg/m³ 8 hours. TWA: 100 ppm 8 hours.
2-butoxyethanol	**ACGIH TLV (United States, 3/2019).** TWA: 20 ppm 8 hours. **OSHA PEL (United States, 5/2018).** **Absorbed through skin.** TWA: 240 mg/m³ 8 hours. TWA: 50 ppm 8 hours.
toluene	**OSHA PEL Z2 (United States, 2/2013).** AMP: 500 ppm 10 minutes. CEIL: 300 ppm TWA: 200 ppm 8 hours. **ACGIH TLV (United States, 3/2019).** TWA: 20 ppm 8 hours.
xylene	**ACGIH TLV (United States, 3/2019).** STEL: 651 mg/m³ 15 minutes. STEL: 150 ppm 15 minutes. TWA: 434 mg/m³ 8 hours. TWA: 100 ppm 8 hours. **OSHA PEL (United States, 5/2018).** TWA: 435 mg/m³ 8 hours. TWA: 100 ppm 8 hours.
4-methylpentan-2-one	**ACGIH TLV (United States, 3/2019).** STEL: 75 ppm 15 minutes. TWA: 20 ppm 8 hours. **OSHA PEL (United States, 5/2018).** TWA: 410 mg/m³ 8 hours. TWA: 100 ppm 8 hours.
Solvent naphtha (petroleum), light aromatic	None.
2-Butenedioic acid (Z)-, dibutyl ester, polymer with chloroethene and 1,2-propanediol mono-2-propenoate	**OSHA PEL (United States).** TWA: 4 mg/m³ Form: Respirable TWA: 10 mg/m³ Form: Total dust
Talc , not containing asbestiform fibres	**ACGIH TLV (United States, 3/2019).** TWA: 2 mg/m³ 8 hours. Form: Respirable **OSHA PEL Z3 (United States).** TWA: 2 mg/m³
1,2,4-trimethylbenzene	**ACGIH TLV (United States, 3/2019).** TWA: 123 mg/m³ 8 hours. TWA: 25 ppm 8 hours.
carbon black, respirable powder	**ACGIH TLV (United States, 3/2019).** TWA: 3 mg/m³ 8 hours. Form: Inhalable fraction **OSHA PEL (United States, 5/2018).** TWA: 3.5 mg/m³ 8 hours.
ethylbenzene	**ACGIH TLV (United States, 3/2019).** TWA: 20 ppm 8 hours. **OSHA PEL (United States, 5/2018).** TWA: 435 mg/m³ 8 hours.

Section 8. Exposure controls/personal protection

	TWA: 100 ppm 8 hours.

Key to abbreviations

A	= Acceptable Maximum Peak	S	= Potential skin absorption
ACGIH	= American Conference of Governmental Industrial Hygienists.	SR	= Respiratory sensitization
C	= Ceiling Limit	SS	= Skin sensitization
F	= Fume	STEL	= Short term Exposure limit values
IPEL	= Internal Permissible Exposure Limit	TD	= Total dust
OSHA	= Occupational Safety and Health Administration.	TLV	= Threshold Limit Value
R	= Respirable	TWA	= Time Weighted Average
Z	= OSHA 29 CFR 1910.1200 Subpart Z - Toxic and Hazardous Substances		

Consult local authorities for acceptable exposure limits.

Recommended monitoring procedures : If this product contains ingredients with exposure limits, personal, workplace atmosphere or biological monitoring may be required to determine the effectiveness of the ventilation or other control measures and/or the necessity to use respiratory protective equipment. Reference should be made to appropriate monitoring standards. Reference to national guidance documents for methods for the determination of hazardous substances will also be required.

Appropriate engineering controls : Use only with adequate ventilation. Use process enclosures, local exhaust ventilation or other engineering controls to keep worker exposure to airborne contaminants below any recommended or statutory limits. The engineering controls also need to keep gas, vapor or dust concentrations below any lower explosive limits. Use explosion-proof ventilation equipment.

Environmental exposure controls : Emissions from ventilation or work process equipment should be checked to ensure they comply with the requirements of environmental protection legislation. In some cases, fume scrubbers, filters or engineering modifications to the process equipment will be necessary to reduce emissions to acceptable levels.

Individual protection measures

Hygiene measures : Wash hands, forearms and face thoroughly after handling chemical products, before eating, smoking and using the lavatory and at the end of the working period. Appropriate techniques should be used to remove potentially contaminated clothing. Contaminated work clothing should not be allowed out of the workplace. Wash contaminated clothing before reusing. Ensure that eyewash stations and safety showers are close to the workstation location.

Eye/face protection : Chemical splash goggles.

Skin protection

Hand protection : Chemical-resistant, impervious gloves complying with an approved standard should be worn at all times when handling chemical products if a risk assessment indicates this is necessary. Considering the parameters specified by the glove manufacturer, check during use that the gloves are still retaining their protective properties. It should be noted that the time to breakthrough for any glove material may be different for different glove manufacturers. In the case of mixtures, consisting of several substances, the protection time of the gloves cannot be accurately estimated.

Gloves : butyl rubber

Body protection : Personal protective equipment for the body should be selected based on the task being performed and the risks involved and should be approved by a specialist before handling this product. When there is a risk of ignition from static electricity, wear anti-static protective clothing. For the greatest protection from static discharges, clothing should include anti-static overalls, boots and gloves.

Section 8. Exposure controls/personal protection

Other skin protection : Appropriate footwear and any additional skin protection measures should be selected based on the task being performed and the risks involved and should be approved by a specialist before handling this product.

Respiratory protection : Respirator selection must be based on known or anticipated exposure levels, the hazards of the product and the safe working limits of the selected respirator. If workers are exposed to concentrations above the exposure limit, they must use appropriate, certified respirators. Use a properly fitted, air-purifying or air-fed respirator complying with an approved standard if a risk assessment indicates this is necessary.

Section 9. Physical and chemical properties

Appearance

Physical state : Liquid.
Color : Not available.
Odor : Not available.
Odor threshold : Not available.
pH : Not available.
Melting point : Not available.
Boiling point : >37.78°C (>100°F)
Flash point : Closed cup: 26.67°C (80°F)
Auto-ignition temperature : Not available.
Decomposition temperature : Not available.
Flammability (solid, gas) : Not available.
Lower and upper explosive (flammable) limits : Not available.
Evaporation rate : Not available.
Vapor pressure : Not available.
Vapor density : Not available.
Relative density : [redacted].35
Density (lbs / gal) : [redacted].27
Bulk Density (g/cm³) : 1.338
Solubility : Insoluble in the following materials: cold water.
Partition coefficient: n-octanol/water : Not available.
Viscosity : Kinematic (40°C (104°F)): >0.21 cm²/s (>21 cSt)
Volatility : [redacted]8% (v/v), 36.573% (w/w)
% Solid. (w/w) : 63.427

Section 10. Stability and reactivity

Reactivity : No specific test data related to reactivity available for this product or its ingredients.

Chemical stability : The product is stable.

Possibility of hazardous reactions : Under normal conditions of storage and use, hazardous reactions will not occur.

Conditions to avoid : When exposed to high temperatures may produce hazardous decomposition products. Refer to protective measures listed in sections 7 and 8.

Incompatible materials : Keep away from the following materials to prevent strong exothermic reactions: oxidizing agents, strong alkalis, strong acids.

Hazardous decomposition products : Decomposition products may include the following materials: carbon monoxide, carbon dioxide, smoke, oxides of nitrogen.

Section 11. Toxicological information

Information on toxicological effects

Acute toxicity

Product/ingredient name	Result	Species	Dose	Exposure
Epoxy Resin (700<MW <=1100)	LD50 Dermal	Rat	>2000 mg/kg	-
	LD50 Oral	Rat	>2000 mg/kg	-
Limestone	LD50 Oral	Rat	6450 mg/kg	-
barium sulfate	LD50 Dermal	Rat	>2000 mg/kg	-
	LD50 Oral	Rat	>5000 mg/kg	-
heptan-2-one	LC50 Inhalation Vapor	Rat	16.7 mg/l	4 hours
	LD50 Dermal	Rabbit	10.206 g/kg	-
	LD50 Oral	Rat	1.6 g/kg	-
2-butoxyethanol	LD50 Dermal	Rabbit	1060 mg/kg	-
	LD50 Oral	Rat - Male	1480 mg/kg	-
toluene	LC50 Inhalation Vapor	Rat	49 g/m³	4 hours
	LD50 Dermal	Rabbit	8.39 g/kg	-
	LD50 Oral	Rat	5580 mg/kg	-
xylene	LD50 Dermal	Rabbit	>1.7 g/kg	-
	LD50 Oral	Rat	4.3 g/kg	-
4-methylpentan-2-one	LC50 Inhalation Vapor	Rat	12.3 mg/l	4 hours
	LD50 Oral	Rat	2.08 g/kg	-
Solvent naphtha (petroleum), light aromatic	LD50 Dermal	Rabbit	3.48 g/kg	-
	LD50 Oral	Rat	8400 mg/kg	-
1,2,4-trimethylbenzene	LC50 Inhalation Vapor	Rat	18000 mg/m³	4 hours
	LD50 Oral	Rat	5 g/kg	-
carbon black, respirable powder	LD50 Dermal	Rabbit	>3 g/kg	-
	LD50 Oral	Rat	>15400 mg/kg	-
ethylbenzene	LC50 Inhalation Vapor	Rat	17.8 mg/l	4 hours

Section 11. Toxicological information

	LD50 Dermal LD50 Oral	Rabbit Rat	17.8 g/kg 3.5 g/kg	- -

Conclusion/Summary : There are no data available on the mixture itself.

Irritation/Corrosion

Product/ingredient name	Result	Species	Score	Exposure	Observation
[redacted]-butoxyethanol	Skin - Moderate irritant Eyes - Irritant	Rabbit Rabbit	- -	4 hours 24 hours	28 days 21 days
xylene	Skin - Moderate irritant	Rabbit	-	24 hours 500 mg	-

Conclusion/Summary

Skin : There are no data available on the mixture itself.

Eyes : There are no data available on the mixture itself.

Respiratory : There are no data available on the mixture itself.

Sensitization

Conclusion/Summary

Skin : There are no data available on the mixture itself.

Respiratory : There are no data available on the mixture itself.

Mutagenicity

Conclusion/Summary : There are no data available on the mixture itself.

Carcinogenicity

Conclusion/Summary : There are no data available on the mixture itself.

Classification

Product/ingredient name	OSHA	IARC	NTP
[redacted]-butoxyethanol	-	3	-
toluene	-	3	-
xylene	-	3	-
4-methylpentan-2-one	-	2B	-
carbon black, respirable powder	-	2B	-
ethylbenzene	-	2B	-

Carcinogen Classification code:

IARC: 1, 2A, 2B, 3, 4
NTP: Known to be a human carcinogen; Reasonably anticipated to be a human carcinogen
OSHA: +
Not listed/not regulated: -

Reproductive toxicity

Conclusion/Summary : There are no data available on the mixture itself.

Teratogenicity

Conclusion/Summary : There are no data available on the mixture itself.

Specific target organ toxicity (single exposure)

Section 11. Toxicological information

Name	Category	Route of exposure	Target organs
Heptan-2-one	Category 3	Not applicable.	Narcotic effects
toluene	Category 3	Not applicable.	Narcotic effects
xylene	Category 3	Not applicable.	Respiratory tract irritation
4-methylpentan-2-one	Category 3	Not applicable.	Respiratory tract irritation
Solvent naphtha (petroleum), light aromatic	Category 3 Category 3	Not applicable. Not applicable.	Narcotic effects Respiratory tract irritation
Talc , not containing asbestiform fibres	Category 3	Not applicable.	Respiratory tract irritation
1,2,4-trimethylbenzene	Category 3	Not applicable.	Respiratory tract irritation

Specific target organ toxicity (repeated exposure)

Name	Category	Route of exposure	Target organs
toluene	Category 2	Not determined	Not determined
ethylbenzene	Category 2	Not determined	hearing organs

Target organs : Contains material which causes damage to the following organs: brain, central nervous system (CNS).
Contains material which may cause damage to the following organs: blood, kidneys, lungs, the nervous system, the reproductive system, liver, heart, spleen, lymphatic system, peripheral nervous system, cardiovascular system, upper respiratory tract, immune system, skin, bone marrow, eye, lens or cornea.

Aspiration hazard

Name	Result
toluene	ASPIRATION HAZARD - Category 1
xylene	ASPIRATION HAZARD - Category 1
Solvent naphtha (petroleum), light aromatic	ASPIRATION HAZARD - Category 1
ethylbenzene	ASPIRATION HAZARD - Category 1

Information on the likely routes of exposure

Potential acute health effects

Eye contact : Causes serious eye irritation.
Inhalation : Harmful if inhaled. Can cause central nervous system (CNS) depression. May cause drowsiness or dizziness.
Skin contact : Causes skin irritation. Defatting to the skin. May cause an allergic skin reaction.
Ingestion : Can cause central nervous system (CNS) depression.

Over-exposure signs/symptoms

Eye contact : Adverse symptoms may include the following:
pain or irritation
watering
redness

Section 11. Toxicological information

Inhalation : Adverse symptoms may include the following:
nausea or vomiting
headache
drowsiness/fatigue
dizziness/vertigo
unconsciousness
reduced fetal weight
increase in fetal deaths
skeletal malformations

Skin contact : Adverse symptoms may include the following:
irritation
redness
dryness
cracking
reduced fetal weight
increase in fetal deaths
skeletal malformations

Ingestion : Adverse symptoms may include the following:
reduced fetal weight
increase in fetal deaths
skeletal malformations

Delayed and immediate effects and also chronic effects from short and long term exposure

Conclusion/Summary : There are no data available on the mixture itself. Exposure to component solvent vapor concentrations in excess of the stated occupational exposure limit may result in adverse health effects such as mucous membrane and respiratory system irritation and adverse effects on the kidneys, liver and central nervous system. Symptoms and signs include headache, dizziness, fatigue, muscular weakness, drowsiness and, in extreme cases, loss of consciousness. Solvents may cause some of the above effects by absorption through the skin. There is some evidence that repeated exposure to organic solvent vapors in combination with constant loud noise can cause greater hearing loss than expected from exposure to noise alone. If splashed in the eyes, the liquid may cause irritation and reversible damage. Ingestion may cause nausea, diarrhea and vomiting. This takes into account, where known, delayed and immediate effects and also chronic effects of components from short-term and long-term exposure by oral, inhalation and dermal routes of exposure and eye contact.

Short term exposure

Potential immediate effects : There are no data available on the mixture itself.

Potential delayed effects : There are no data available on the mixture itself.

Long term exposure

Potential immediate effects : There are no data available on the mixture itself.

Potential delayed effects : There are no data available on the mixture itself.

Potential chronic health effects

General : May cause damage to organs through prolonged or repeated exposure. Prolonged or repeated contact can defat the skin and lead to irritation, cracking and/or dermatitis. Once sensitized, a severe allergic reaction may occur when subsequently exposed to very low levels.

Carcinogenicity : Suspected of causing cancer. Risk of cancer depends on duration and level of exposure.

Section 11. Toxicological information

Mutagenicity : No known significant effects or critical hazards.
Teratogenicity : Suspected of damaging the unborn child.
Developmental effects : No known significant effects or critical hazards.
Fertility effects : No known significant effects or critical hazards.

Numerical measures of toxicity

Acute toxicity estimates

Product/ingredient name	Oral (mg/kg)	Dermal (mg/kg)	Inhalation (gases) (ppm)	Inhalation (vapors) (mg/l)	Inhalation (dusts and mists) (mg/l)
NON SANDING EPOXY PRIMER BLACK (LEAD FREE)	4996.3	3049.9	N/A	31.3	3.4
Epoxy Resin (700<MW<=1100)	2500	2500	N/A	N/A	N/A
Limestone	6450	N/A	N/A	N/A	N/A
barium sulfate	N/A	2500	N/A	N/A	N/A
heptan-2-one	1600	10206	N/A	16.7	1.5
2-butoxyethanol	1480	1060	N/A	11	1.5
toluene	5580	8390	N/A	49	N/A
xylene	4300	1100	N/A	11	1.5
4-methylpentan-2-one	2080	N/A	N/A	12.3	1.5
Solvent naphtha (petroleum), light aromatic	8400	3480	N/A	N/A	N/A
1,2,4-trimethylbenzene	5000	N/A	N/A	18	1.5
carbon black, respirable powder	N/A	2500	N/A	N/A	N/A
ethylbenzene	3500	17800	N/A	17.8	1.5

Section 12. Ecological information

Toxicity

Product/ingredient name	Result	Species	Exposure
Limestone	Acute LC50 >56000 mg/l	Fish	96 hours
heptan-2-one	Acute LC50 131 mg/l	Fish	96 hours
2-butoxyethanol	Acute LC50 1474 mg/l	Fish	96 hours
	Chronic NOEC >100 mg/l	Fish	21 days
Solvent naphtha (petroleum), light aromatic	Acute LC50 8.2 mg/l	Fish	96 hours
ethylbenzene	Acute LC50 150 to 200 mg/l Fresh water	Fish	96 hours

Persistence and degradability

Product/ingredient name	Test	Result	Dose	Inoculum
heptan-2-one	OECD 310	69 % - Readily - 28 days	-	-

Section 12. Ecological information

Product/ingredient name	Aquatic half-life	Photolysis	Biodegradability
Heptan-2-one	-	-	Readily
2-butoxyethanol	-	-	Readily
toluene	-	-	Readily
xylene	-	-	Readily
ethylbenzene	-	-	Readily

Bioaccumulative potential

Product/ingredient name	$LogP_{ow}$	BCF	Potential
Heptan-2-one	1.98	-	low
2-butoxyethanol	0.81	-	low
toluene	2.73	8.32	low
xylene	3.16	7.4 to 18.5	low
4-methylpentan-2-one	1.31	-	low
1,2,4-trimethylbenzene	3.63	120.23	low
ethylbenzene	3.15	79.43	low

Mobility in soil

Soil/water partition coefficient (K_{OC}) : Not available.

Section 13. Disposal considerations

Disposal methods : The generation of waste should be avoided or minimized wherever possible. Disposal of this product, solutions and any by-products should at all times comply with the requirements of environmental protection and waste disposal legislation and any regional local authority requirements. Dispose of surplus and non-recyclable products via a licensed waste disposal contractor. Waste should not be disposed of untreated to the sewer unless fully compliant with the requirements of all authorities with jurisdiction. Waste packaging should be recycled. Incineration or landfill should only be considered when recycling is not feasible. This material and its container must be disposed of in a safe way. Care should be taken when handling emptied containers that have not been cleaned or rinsed out. Empty containers or liners may retain some product residues. Vapor from product residues may create a highly flammable or explosive atmosphere inside the container. Do not cut, weld or grind used containers unless they have been cleaned thoroughly internally. Avoid dispersal of spilled material and runoff and contact with soil, waterways, drains and sewers.

Disposal should be in accordance with applicable regional, national and local laws and regulations.

Refer to Section 7: HANDLING AND STORAGE and Section 8: EXPOSURE CONTROLS/PERSONAL PROTECTION for additional handling information and protection of employees. Section 6. Accidental release measures

14. Transport information

	DOT	IMDG	IATA
UN number	UN1263	UN1263	UN1263
UN proper shipping name	PAINT	PAINT	PAINT
Transport hazard class (es)	3	3	3
Packing group	III	III	III
Environmental hazards	No.	Yes.	Yes. The environmentally hazardous substance mark is not required.
Marine pollutant substances	Not applicable.	(trizinc bis(orthophosphate), Solvent naphtha (petroleum), light aromatic)	Not applicable.
Product RQ (lbs)	2583.2	Not applicable.	Not applicable.
RQ substances	xylene, toluene)	Not applicable.	Not applicable.

Additional information

DOT : Package sizes shipped in quantities less than the product reportable quantity are not subject to the RQ (reportable quantity) transportation requirements.

IMDG : The marine pollutant mark is not required when transported in sizes of ≤5 L or ≤5 kg.

IATA : The environmentally hazardous substance mark may appear if required by other transportation regulations.

Special precautions for user : **Transport within user's premises:** always transport in closed containers that are upright and secure. Ensure that persons transporting the product know what to do in the event of an accident or spillage.

Section 15. Regulatory information

United States

United States inventory (TSCA 8b) : All components are listed or exempted.

U.S. Federal regulations :

SARA 302/304

SARA 304 RQ : Not applicable.

Composition/information on ingredients

No products were found.

SARA 311/312

Section 15. Regulatory information

Classification : FLAMMABLE LIQUIDS - Category 3
ACUTE TOXICITY (inhalation) - Category 4
SKIN IRRITATION - Category 2
EYE IRRITATION - Category 2A
SKIN SENSITIZATION - Category 1
CARCINOGENICITY - Category 2
TOXIC TO REPRODUCTION (Unborn child) - Category 2
SPECIFIC TARGET ORGAN TOXICITY (SINGLE EXPOSURE) (Narcotic effects) - Category 3
SPECIFIC TARGET ORGAN TOXICITY (REPEATED EXPOSURE) - Category 2
HNOC - Defatting irritant

Composition/information on ingredients

Name	%	Classification
Epoxy Resin (700<MW<=1100)	≥10 - ≤20	COMBUSTIBLE DUSTS SKIN IRRITATION - Category 2 EYE IRRITATION - Category 2A SKIN SENSITIZATION - Category 1B
heptan-2-one	≥10 - ≤18	FLAMMABLE LIQUIDS - Category 3 ACUTE TOXICITY (oral) - Category 4 ACUTE TOXICITY (inhalation) - Category 4 SPECIFIC TARGET ORGAN TOXICITY (SINGLE EXPOSURE) (Narcotic effects) - Category 3 HNOC - Defatting irritant
2-butoxyethanol	≥1.0 - ≤5.0	FLAMMABLE LIQUIDS - Category 4 ACUTE TOXICITY (oral) - Category 4 ACUTE TOXICITY (dermal) - Category 4 ACUTE TOXICITY (inhalation) - Category 4 SKIN IRRITATION - Category 2 EYE IRRITATION - Category 2A
toluene	≥1.0 - ≤5.0	FLAMMABLE LIQUIDS - Category 2 SKIN IRRITATION - Category 2 TOXIC TO REPRODUCTION (Unborn child) - Category 2 SPECIFIC TARGET ORGAN TOXICITY (SINGLE EXPOSURE) (Narcotic effects) - Category 3 SPECIFIC TARGET ORGAN TOXICITY (REPEATED EXPOSURE) - Category 2 ASPIRATION HAZARD - Category 1 HNOC - Defatting irritant
xylene	≥1.0 - ≤4.8	FLAMMABLE LIQUIDS - Category 3 ACUTE TOXICITY (dermal) - Category 4 ACUTE TOXICITY (inhalation) - Category 4 SKIN IRRITATION - Category 2 EYE IRRITATION - Category 2A SPECIFIC TARGET ORGAN TOXICITY (SINGLE EXPOSURE) (Respiratory tract irritation) - Category 3 ASPIRATION HAZARD - Category 1
4-methylpentan-2-one	≥1.0 - ≤4.6	FLAMMABLE LIQUIDS - Category 2 ACUTE TOXICITY (inhalation) - Category 4 EYE IRRITATION - Category 2A CARCINOGENICITY - Category 2 SPECIFIC TARGET ORGAN TOXICITY (SINGLE EXPOSURE)

Section 15. Regulatory information

		(Respiratory tract irritation) - Category 3 HNOC - Defatting irritant
Solvent naphtha (petroleum), light aromatic	≥1.0 - ≤4.3	FLAMMABLE LIQUIDS - Category 3 SPECIFIC TARGET ORGAN TOXICITY (SINGLE EXPOSURE) (Respiratory tract irritation) - Category 3 SPECIFIC TARGET ORGAN TOXICITY (SINGLE EXPOSURE) (Narcotic effects) - Category 3 ASPIRATION HAZARD - Category 1 HNOC - Defatting irritant
Talc , not containing asbestiform fibres	≥1.0 - ≤3.6	SPECIFIC TARGET ORGAN TOXICITY (SINGLE EXPOSURE) (Respiratory tract irritation) - Category 3
1,2,4-trimethylbenzene	≥0.10 - ≤2.5	FLAMMABLE LIQUIDS - Category 3 ACUTE TOXICITY (inhalation) - Category 4 SKIN IRRITATION - Category 2 EYE IRRITATION - Category 2A SPECIFIC TARGET ORGAN TOXICITY (SINGLE EXPOSURE) (Respiratory tract irritation) - Category 3 HNOC - Defatting irritant
carbon black, respirable powder	≥0.10 - ≤2.5	COMBUSTIBLE DUSTS CARCINOGENICITY - Category 2
ethylbenzene	<1.0	FLAMMABLE LIQUIDS - Category 2 ACUTE TOXICITY (inhalation) - Category 4 CARCINOGENICITY - Category 2 SPECIFIC TARGET ORGAN TOXICITY (REPEATED EXPOSURE) (hearing organs) - Category 2 ASPIRATION HAZARD - Category 1 HNOC - Defatting irritant

SARA 313

Supplier notification :

Chemical name	CAS number	Concentration
trizinc bis(orthophosphate)	7779-90-0	5 - 10
2-butoxyethanol	111-76-2	1 - 5
toluene	108-88-3	1 - 5
xylene	1330-20-7	1 - 5
4-methylpentan-2-one	108-10-1	1 - 5
1,2,4-trimethylbenzene	95-63-6	1 - 5
ethylbenzene	100-41-4	0.1 - 1

SARA 313 notifications must not be detached from the SDS and any copying and redistribution of the SDS shall include copying and redistribution of the notice attached to copies of the SDS subsequently redistributed.

Additional environmental information is contained on the Environmental Data Sheet for this product, which can be obtained from your PPG representative.

California Prop. 65

⚠ **WARNING**: Cancer and Reproductive Harm - www.P65Warnings.ca.gov.

Section 16. Other information

Hazardous Material Information System (U.S.A.)

Health : 2 * **Flammability** : 3 **Physical hazards** : 0
(*) - Chronic effects

Caution: HMIS® ratings are based on a 0-4 rating scale, with 0 representing minimal hazards or risks, and 4 representing significant hazards or risks. Although HMIS® ratings and the associated label are not required on MSDSs or products leaving a facility under 29 CFR 1910.1200, the preparer may choose to provide them. HMIS® ratings are to be used with a fully implemented HMIS® program. HMIS® is a registered trademark and service mark of the American Coatings Association, Inc.

The customer is responsible for determining the PPE code for this material. For more information on HMIS® Personal Protective Equipment (PPE) codes, consult the HMIS® Implementation Manual.

National Fire Protection Association (U.S.A.)

Health : 2 **Flammability** : 3 **Instability** : 0

Date of previous issue : **10/19/2019**

Organization that prepared the MSDS : EHS

Key to abbreviations : ATE = Acute Toxicity Estimate
BCF = Bioconcentration Factor
GHS = Globally Harmonized System of Classification and Labelling of Chemicals
IATA = International Air Transport Association
IBC = Intermediate Bulk Container
IMDG = International Maritime Dangerous Goods
LogPow = logarithm of the octanol/water partition coefficient
MARPOL = International Convention for the Prevention of Pollution From Ships, 1973 as modified by the Protocol of 1978. ("Marpol" = marine pollution)
N/A = Not available
SGG = Segregation Group
UN = United Nations

◤ **Indicates information that has changed from previously issued version.**

Disclaimer

The information contained in this data sheet is based on present scientific and technical knowledge. The purpose of this information is to draw attention to the health and safety aspects concerning the products supplied by PPG, and to recommend precautionary measures for the storage and handling of the products. No warranty or guarantee is given in respect of the properties of the products. No liability can be accepted for any failure to observe the precautionary measures described in this data sheet or for any misuse of the products.

DPLF Epoxy Primer

P-196

DPLF

DPLF Epoxy Primer is an excellent corrosion-resistant primer and provides excellent adhesion to many types of properly prepared metal, fiberglass and aluminum substrates, as well as plastic fillers.

DPLF Epoxy Primer may also be used as a sealer and topcoated with most PPG Refinish products.

DPLF Epoxy Primers come in 5 colors:
DP40LF (Gray-Green), DP48LF (White), DP50LF (Gray), DP74LF (Red), and DP90LF (Black).

Features & Benefits

- Direct to metal
- Strong corrosion protection
- Excellent adhesion
- Primer / Sealer

Compatible Surfaces

DPLF may be applied over

- Properly cleaned and sanded, steel, galvanized steel, sand blasted steel and aluminum
- Properly cleaned and sanded gel coated fiberglass
- Properly cleaned (unsanded) E-Coat with DP401LF catalyst only
- Various cleaned and sanded rigid plastic*: ABS, Nylon, Polycarbonate, Noryl, PBT SMC, with DP401LF Catalyst only
- Properly cleaned and sanded OEM Finishes - for OE lacquer see ++Caution statement
- Cured and sanded refinish coatings
- DF Body Fillers
- SX Metal Treatments

NOTE: DPLF is direct to metal and MUST NOT be applied over etch or wash primers. Film build of 1.2-1.5 mils of DPLF is required or the surface must be treated with metal treatment/conditioner.

*Unprimed plastics require the use of a plastic adhesion promoter prior to the application of DPLF epoxy primer.
++**Caution** when DPLF is sprayed over lacquer substrates or basecoat that is not cross linked , allow to set overnight before applying another coat of primer or topcoat as lifting may occur. This can be avoided by applying the DPLF Epoxy Primer, color and clear coating the same day or by catalyzing the basecoat.

Required Products

Catalyst

DP401LF Epoxy Primer Catalyst
DP402LF Epoxy Primer Catalyst
Acetone*

*Optional

DPLF

Surface Preparation:

- Wash the area to be painted with soap and water, then clean with appropriate PPG cleaner.
- Sand the bare metal areas completely with 80-180 grit abrasive. Sand old finishes by hand or machine with 320-400 grit dry or 600 grit wet.
- Re-clean with appropriate PPG cleaner
- Chemical treatment or the use of a conversion coating will enhance the adhesion and performance properties of the finished system.
- Prime aluminum within 8 hours.

Prime carbon steel immediately after cleaning.

Mix Ratio:

DPLF Epoxy Primer	:	DPLF Catalyst	:	(optional) Acetone*
2	:	1	:	½

Note: Thoroughly mix primer and catalyst (5 minutes mechanical agitation recommended).

Allow 30 minutes induction period to obtain maximum performance properties prior to use of DPLF/DP401LF.
No induction period is necessary when using DPLF/DP402LF

Do not blend DP401LF and DP402LF together

Pot Life: DPLF/DP401LF is 72 hours at 70°F (21°C)
DPLF/DP402LF is 8 hours at 70°F (21°C)

Note: In non-automotive applications where higher VOC primers are allowed, one half part of DT reducer may be added. This 2:1:½ blend ratio will result in a 4.90 VOC sealer.

*The use of acetone is optional, however when used, the minimum recommended film build must be maintained.

DPLF Epoxy Primer cannot be tinted.
DPLF Epoxy colors may be blended together.

Painting Flexible Parts:

DPLF Epoxy Primer may be used as a primer sealer on flexible parts over DELTRON® or ONECHOICE® Plastic Adhesion Promoters.

DPLF Epoxy Primer	:	DP401LF	:	Acetone*
2	:	1	:	½

Note: Do not use DP402LF Fast Catalyst on flexible parts.

Apply 1 wet coat.

Recommended Dry Film build: .5-.75 mils
Reductions other than 2:1:½ or more than 1 coat will not result in a flexible coating.

Additives:

None

DPLF

Air Pressure and Spraygun Setup:

HVLP:	8-10 psi at the air cap
Compliant:	29-40 psi at the gun
Gun Setup:	1.3-1.6 mm or equivalent

Note: For best overall results, refer to spraygun manufacturer's recommendations for inlet air pressures.

Application:

	DP401LF	DP402LF
Apply:	1-2 wet coats	1-2 wet coats
Recommended Dry Film Build		
DPLF Epoxy Primer:	0.75-1.5 mils	0.75-1.5 mils
DPLF Epoxy Primer on Flexible parts:	0.5-0.75 mils	not recommended
DPLF Epoxy Primer with Acetone:	0.75-1.5 mils	0.75-1.5 mils

Drying Times:

		DP401LF	DP402LF
Between Coats: At 70°F (21°C)		10-15 minutes	10-15 minutes
Dry to topcoat: At 70°F (21°C)	**1 coat**	60 minutes	30 minutes
	2 coats	90 minutes	60 minutes
	Flexibilized:	30 minutes	NA
To apply body filler: At 70°F (21°C)	**1 coat**	60 minutes	60 minutes
	2 coats	overnight dry	overnight dry

Note: DPLF Epoxy Primer may be recoated any time up to 1 week.
After 1 week, it must be cleaned, sanded and recleaned. Reapply 1 additional coat of DPLF Epoxy Primer only if applying basecoat directly to DPLF

Compatible Topcoats:

DPLF Epoxy Primer may be topcoated with:
DF Body Fillers
CONCEPT® (DCC) Acrylic Urethane
Deltron 2000 (DBC) Basecoat
Deltron primers, surfacers, and sealers
OneChoice surfacers and sealers
GLOBAL REFINISH SYSTEM® Basecoat
Global Refinish System primers, surfacers, and sealers
NEXA AUTOCOLOR® Basecoat
Nexa Autocolor primers, surfacers, and sealers
ENVIROBASE® High Performance Basecoat
Envirobase High Performance primers, surfacers, and sealers
AQUABASE® Plus Basecoat
Aquabase Plus primers, surfacers, and sealers

DPLF

Equipment Cleaning: Spray guns, gun cups, storage pots, etc., should be cleaned thoroughly after each use with any appropriate PPG general purpose solvent.

Technical Data:

DPLF Epoxy Primer	DPXXLF : DP401LF/DP402LF	DPXXLF : DP401LF/DP402LF : Acetone
Volume Ratio:	2 : 1	2 : 1 : 1/2
Applicable Use Category:	Primer Surfacer	Primer Surfacer
VOC Actual (g/L)	537-543	460-465
VOC Actual (lbs./ gal)	4.48-4.53	3.84-3.88
VOC Regulatory (less water, less exempt (g/L)	537-543	534-542
VOC Regulatory (less water, less exempt (lbs./ US gal.)	4.48-4.53	4.46-4.52
Density (g/L)	1198-1272	1140-1203
Density (lbs./ US gal)	10.00-10.61	9.51-10.04
Solids vol. %	35.8-36.9	30.6-31.6
Solids wt. %	55.2-57.3	49.7-51.9
Sq. ft. coverage / US gal. (1 mil. At 100% transfer efficiency)	572-592	490-507
DPLF Epoxy Primer (for flexible parts) Use DP401LF only	**DPXXLF : DP401LF : DT Reducer**	**DPXXLF : DP401LF : Acetone**
Volume Ratio (RTS):	2 : 1 : 1/2	2 : 1 : 1/2
Applicable Use Category:	Sealer Specialty	Sealer Specialty
VOC Actual (g/L)	460-587	460-465
VOC Actual (lbs./ gal)	3.84-4.90	3.84-3.88
VOC Regulatory (less water, less exempt (g/L)	536-587	536-542
VOC Regulatory (less water, less exempt (lbs./ US gal.)	4.47-4.90	4.47-4.52
Density (g/L)	1140-1269	1140-1190
Density (lbs./ US gal)	9.51-10.59	9.51-9.93
Solids vol. %	30.6-31.4	30.6-31.4
Solids wt. %	46.5-51.4	49.7-51.4
Sq. ft. coverage / US gal. (1 mil. At 100% transfer efficiency)	490-504	490-504

See Safety Data Sheet and Labels for additional safety information and handling instructions.

Important: The contents of this package must be blended with other components before the product can be used. Before opening the packages, be sure you understand the warning messages on the labels of all components since the mixture will have the hazards of all its parts. Improper spray technique may result in a hazardous condition. Follow spray equipment manufacturer's instructions to prevent personal injury or fire. Follow directions for respirator use. Wear eye and skin protection. Observe all applicable precautions.

EMERGENCY MEDICAL OR SPILL CONTROL INFORMATION (412) 434-4515; IN CANADA (514) 645-1320

Materials described are designed for application by professional, trained personnel using proper equipment and are not intended for sale to the public. Products mentioned may be hazardous and should only be used according to direction, while observing precautions and warning statements listed on label. Statements and methods described are based upon the best information and practices known to PPG Industries. Procedures for applications mentioned are suggestions only and are not to be construed as representations or warranties as to performance, results, or fitness for any intended use, nor does PPG Industries warrant freedom from patent infringement in the use of any formula or process set forth herein.

PPG Automotive Refinish
19699 Progress Drive
Strongsville, OH 44149
800.647.6050

PPG Canada Inc.
2301 Royal Windsor Drive, Unit #6
Mississauga, Ontario L5J 1K5
888.310.4762

Follow us online:
www.ppgrefinish.com

We protect and beautify the world™

© 2020 PPG Industries, Inc. All rights reserved

The PPG Logo, *Aquabase, Concept, Deltron, Envirobase,* and *Global Refinish System* are registered trademarks and *We protect and beautify the world* is a trademark of PPG Industries of Ohio, Inc.

Rev. 10/20

ENVIROBASE®
HIGH PERFORMANCE

Product Information

ECS21 White, ECS25 Gray, ECS27 Black A-Chromatic LV Sealer

Product Description

A-Chromatic LV Sealer ECS21, ECS25 and ECS27 are premium quality, wet on wet sealers specifically for use under ENVIROBASE® High Performance Waterborne Basecoat.

This fast drying A-Chromatic LV sealer has superior flow properties and excellent topcoat holdout. A variety of A-Chromatic grays can be achieved by intermixing of the three packaged sealers. The sealers can be applied over un-sanded OEM e-coat, sanded original finishes and/or properly prepared and treated bare steel, aluminum, fiberglass and plastic.

Preparation of Substrate

In all cases wash all surfaces to be painted with soap and water, then apply the appropriate ONECHOICE® cleaner. Ensure that the substrate is thoroughly cleaned and dried both before and after preparation work.

Original Paintwork should be sanded using European P400 / US 360 grit discs (dry) or European P600 / US 400 grade paper (wet). Exposed metal should be spot-primed with a suitable bare metal primer (see below).

Aluminum, Bare Steel, and Galvanized Steel must be clean, rust-free and abraded thoroughly using European P180 / US 180 to European P280 / US 240 grit paper (wet). These substrates must be primed with an etch primer. Additional film build over etch primers is strongly recommended, a minimum of 1.5 mils of the A-Chromatic LV Sealer must be applied in two coats.

Electrodeposition Primer must be thoroughly cleaned and may then be directly overcoated with the A-Chromatic LV Sealer as a Wet-on-Wet Sealer without abrading.

Polyester Body Fillers should be dry sanded using European P280 / US 240 grit paper.

Gel Coated Fiber Glass and SMC should be dry sanded using European P280 / US 240 grit paper.

Plastic should be dry sanded with European P600 / US 400 (use a finer grit for softer plastics) and prime first with a Plastic Adhesion Promoter.

© 2016 PPG Industries

APPLICATION GUIDE

Mixing Ratio

ECS2x LV Sealer:	**4 Vols.**
EH391/EH392 Hardener:	**1 Vol.**
D87xx/DT18xx Thinner:	**1 Vol.**

Thinner Selection

D8764:	Fast Compliant Thinner	DT1845:	Cool Temperature 18-25°C (65-77°F)
D8774:	Medium Compliant Thinner	DT1850:	Medium Temperature 25-35°C (77-95°F)
D8767:	Slow Compliant Thinner	DT1855:	Hot Temperature over 35°C (95°C)

Pot Life

1 hour at 70°F (21°C)

Additives

SLV814 Universal Flexibilizer:

Ready to Spray ECS2x LV Sealer:	10 Vols.
SLV814:	1 Vol.

Spraygun set up

Fluid Tip:	1.4 - 1.6 mm or equivalent
Spray Viscosity:	20 - 25 seconds #2 Zahn at 70°F (21°C)

Spray Pressure

HVLP at the air cap	10 psi
Compliant at the spray gun	29 - 40 psi

Note: For best overall results, refer to the spray gun manufacturer's recommendations for optimum inlet air pressures.

Number of Coats

1 - 2 coats

Film build per wet coat:	2.5 mils
Dried film build per coat:	1.0 mils

Flash Off 70°F (21°C)

Between Coats:	5 - 10 minutes
Before Baking:	5 - 10 minutes
Before topcoating:	15 minutes at 70°F (21°C) for 1 coat 30 minutes at 70°F (21°C) for 2 coats

After 72 hours, sealer must be sanded. If sanded film is below 1 mil, sealer must be reapplied.

Drying Times

Dust-Free 70°F (21°C)	10 minutes
Dry to handle 70°F (21°C)	1 hour
Tape Time 70°F (21°C)	1½ hours
IR (Infrared)	10 minutes Medium Wave 5 minutes Short Wave

© 2016 PPG Industries

APPLICATION GUIDE (cont'd):

Overcoat/Recoat

Envirobase High Performance

15 minutes at 70°F (21°C) for 1 coat
30 minutes at 70°F (21°C) for 2 coats

Note: After 72 hours, sealer must be sanded. If sanded film is below 1 mil, sealer must be reapplied.

Grade wet: P1000 / US 500 grade paper
Grade dry: P1000 / US 500 grade paper

Performance Guidelines

- The use of HVLP spray equipment can give an increase in transfer efficiency of around 25% depending upon the make and model of the equipment used.
- For all substrates except un-sanded electrodeposition primer, ensure that the surface is thoroughly sanded to the panel edge or to a distance several centimeters beyond the damaged area, whoever is the smaller.
- Do not attempt spot repair on original or refinish thermoplastic applications, lacquer or 1K finishes.
- Partially used cans of hardener must be carefully closed.

Technical Data

Total Dry Film Build:

Minimum	25µ / 1.0 mils
Maximum	37µ / 1.5 mils
Film build per wet coat	62.5µ / 2.5 mils
Dried film build per coat	25µ / 1.0 mils
% solids by volume RTS	34.5%
Theoretical coverage*	550 sq. ft. per US gallon

*Theoretical coverage in sq. ft./ US gallon ready-to-spray (RTS), 1.0 mil dry film thickness

	ECS2x : EH391 : D87xx/DT18xx	ECS2x : EH392 : D87xx/DT18xx	ECS2x : EH391 : D87xx/DT18xx + SLV814	ECS2x : EH392 : D87xx/DT18xx + SLV814
RTS Combinations	4 : 1 : 1	4 : 1 : 1	4 : 1 : 1+10%	4 : 1 : 1+10%
Applicable Use Category	Primer	Primer	Primer	Primer
VOC Actual (g/L)	95	111	90	105
VOC Actual (lbs./ US gal.)	0.80	0.93	0.75	0.87
VOC Regulatory (g/L) (less water less exempt)	218	246	210	236
VOC Regulatory (lbs./ US gal.) (less water less exempt)	1.82	2.05	1.75	1.97
Density (g/L)	1372 - 1431	1365 - 1424	1359 - 1412	1352 - 1405
Density (lbs./ US gal.)	11.45 - 11.94	11.39 - 11.88	11.34 - 11.78	11.28 - 11.72
Volatiles wt. %	57.4 - 59.4	57.3 - 59.3	58.7 - 60.5	58.6 - 60.4
Water wt. %	0.0	0.0	0.0	0.0
Exempt wt. %	50.5 - 52.7	49.3 - 51.5	52.1 - 54.1	51.0 - 52.9
Water vol. %	0.0	0.0	0.0	0.0
Exempt vol. %	56.6	55.0	57.3	55.8

© 2016 PPG Industries

*A*Chromatic Gray Mixing Chart — *A*Chromatic LV Sealer

This chart can be used to mix the A-Chromatic LV Sealer.
The G1-G7 ratios will help to achieve better hiding when used as a guide for mixing the A-Chromatic LV Sealer.

Mix Ratio By Volume			Mix Ratio By Cumulative Weight							
			Grams				Parts			
	Mix Ratio		¼ Pint	½ Pint	Pint	Quart	¼ Pint	½ Pint	Pint	Quart
G1	ECS21	4	116	232	464	928	131	262	523	1047
	EH39x	1	141	282	564	1128	159	318	636	1272
	D87xx/DT18xx	1	167	334	668	1336	188	377	753	1507
G3	ECS21	3	87	174	348	696	98	196	392	785
	ECS25	1	116	232	464	928	131	262	523	1047
	EH39x	1	141	282	564	1128	159	318	636	1272
	D87xx/DT18xx	1	167	334	668	1336	188	377	753	1507
G5	ECS25	4	116	232	464	928	131	262	523	1047
	EH39x	1	141	282	564	1128	159	318	636	1272
	D87xx/DT18xx	1	167	334	668	1336	188	377	753	1507
G6	ECS25	3	87	174	348	696	98	196	392	785
	ECS27	1	116	232	464	928	131	262	523	1047
	EH39x	1	141	282	564	1128	159	318	636	1272
	D87xx/DT18xx	1	167	334	668	1336	188	377	753	1507
G7	ECS27	4	115	230	460	920	130	259	519	1038
	EH39x	1	140	280	560	1120	158	316	632	1263
	D87xx/DT18xx	1	166	332	664	1328	187	374	749	1498

© 2016 PPG Industries

HEALTH AND SAFETY

See Material Safety Data Sheet and Labels for additional safety information and handling instructions.

- The contents of this package may have to be blended with other components before the product can be used. Before opening the packages, be sure you understand the warning messages on the labels and MSDS of all the components, since the mixture will have the hazards of all its parts.
- Improper handling and use, for example, poor spray technique, inadequate engineering controls and/or lack of proper Personal Protective Equipment (PPE), may result in hazardous conditions or injury.
- Follow spray equipment manufacturer's instructions to prevent personal injury or fire.
- Provide adequate ventilation for health and fire hazard control.
- Follow company policy, product MSDS and respirator manufacturer's recommendations for selection and proper use of respiratory protection. Be sure employees are adequately trained on the safe use of respirators per company and regulatory requirements.
- Store waterborne and solvent borne waste separately. A competent agent with appropriate certification must handle all waterborne wastes. Wastes must be disposed in accordance with all Federal, State, Provincial and local laws and regulations.
- Wear appropriate PPE such as eye and skin protection. In the event of injury, see first aid procedures on MSDS.
- Always observe all applicable precautions and follow good safety and hygiene practices.

Emergency Medical or Spill Control Information: (412) 434-4515; In Canada (514) 645-1320

Materials described are designed for application by professional, trained personnel using proper equipment and are not intended for sale to the general public. Products mentioned may be hazardous and should only be used according to directions, while observing precautions and warning systems listed on label. Statements and methods described are based upon the best information and practices known to PPG Industries. Procedures for applications mentioned are suggestions only and are not to be construed as representations or warranties as to performance, result, or fitness for any intended use, nor does PPG Industries warrant freedom from patent infringement in the use of any formula or process set forth herein.

We protect and beautify the world™

PPG Automotive Refinish
19699 Progress Drive
Strongsville, OH 44149
800.647.6050

PPG Canada Inc.
2301 Royal Windsor Drive, Unit #6
Mississauga, Ontario L5J 1K5
888.310.4762

Follow us online:

www.ppgrefinish.com

The *PPG* Logo, *Bringing innovation to the surface, Envirobase and OneChoice* are trademarks of PPG Industries Ohio, Inc.

© 2016 PPG Industries

SAFETY DATA SHEET

Date of issue/Date of revision **21 April 2021**
Version 18

Section 1. Identification

Product name : A-CHROMATIC LV SEALER - WHITE
Product code : ECS21
Other means of identification : Not available.
Product type : Liquid.

Relevant identified uses of the substance or mixture and uses advised against

Product use : Industrial applications.
Use of the substance/ mixture : Coating. Paints. Painting-related materials.
Uses advised against : Not applicable.

Manufacturer : PPG Industries, Inc.
One PPG Place,
Pittsburgh, PA 15272
Emergency telephone number : (412) 434-4515 (U.S.)
(514) 645-1320 (Canada)
SETIQ Interior de la República: 800-00-214-00 (México)
SETIQ Ciudad de México: (55) 5559-1588 (México)
Technical Phone Number : 1-800-647-6050

Section 2. Hazards identification

OSHA/HCS status : This material is considered hazardous by the OSHA Hazard Communication Standard (29 CFR 1910.1200).
Classification of the substance or mixture : FLAMMABLE LIQUIDS - Category 2
SKIN IRRITATION - Category 2
EYE IRRITATION - Category 2A
CARCINOGENICITY - Category 2
TOXIC TO REPRODUCTION - Category 1B
SPECIFIC TARGET ORGAN TOXICITY (SINGLE EXPOSURE) (Respiratory tract irritation) - Category 3

Percentage of the mixture consisting of ingredient(s) of unknown acute toxicity: 15.6% (oral), 26.8% (dermal), 26.6% (inhalation)

Section 2. Hazards identification

This product contains TiO2 which has been classified as a GHS Carcinogen Category 2 based on its IARC 2B classification. For many PPG products, TiO2 is utilized as a raw material in a liquid coating formulation. In this case, the TiO2 particles are bound in a matrix with no meaningful potential for human exposure to unbound particles of TiO2 when the product is applied with a brush or roller. Sanding the coating surface or mist from spray applications may be harmful depending on the duration and level of exposure and require the use of appropriate personal protective equipment and/or engineering controls (see Section 8).

GHS label elements

Hazard pictograms :

Signal word : Danger

Hazard statements : Highly flammable liquid and vapor.
Causes skin irritation.
Causes serious eye irritation.
May cause respiratory irritation.
Suspected of causing cancer.
May damage fertility or the unborn child.

Precautionary statements

Prevention : Obtain special instructions before use. Do not handle until all safety precautions have been read and understood. Wear protective gloves, protective clothing and eye or face protection. Keep away from heat, hot surfaces, sparks, open flames and other ignition sources. No smoking. Use explosion-proof electrical, ventilating or lighting equipment. Use non-sparking tools. Take action to prevent static discharges. Use only outdoors or in a well-ventilated area. Avoid breathing vapor. Wash thoroughly after handling.

Response : IF exposed or concerned: Get medical advice or attention. IF INHALED: Remove person to fresh air and keep comfortable for breathing. Call a POISON CENTER or doctor if you feel unwell. IF ON SKIN (or hair): Take off immediately all contaminated clothing. Rinse skin with water. IF ON SKIN: Wash with plenty of water. If skin irritation occurs: Get medical advice or attention. IF IN EYES: Rinse cautiously with water for several minutes. Remove contact lenses, if present and easy to do. Continue rinsing. If eye irritation persists: Get medical advice or attention.

Storage : Store locked up. Store in a well-ventilated place. Keep container tightly closed. Keep cool.

Disposal : Dispose of contents and container in accordance with all local, regional, national and international regulations.

Supplemental label elements : Repeated exposure to high vapor concentrations may cause irritation of the respiratory system and permanent brain and nervous system damage. Inhalation of vapor/aerosol concentrations above the recommended exposure limits causes headaches, drowsiness and nausea and may lead to unconsciousness or death. Avoid contact with skin and clothing. Wash thoroughly after handling. Emits toxic fumes when heated.

Hazards not otherwise classified : Prolonged or repeated contact may dry skin and cause irritation.

Section 3. Composition/information on ingredients

Substance/mixture : Mixture
Product name : A-CHROMATIC LV SEALER - WHITE

Ingredient name	%	CAS number
4-chloro-α,α,α-trifluorotoluene	≥20 - ≤50	98-56-6
titanium dioxide	≥10 - ≤20	13463-67-7
Talc , not containing asbestiform fibres	≥5.0 - ≤10	14807-96-6
Kaolin	≥1.0 - ≤5.0	1332-58-7
2-methoxy-1-methylethyl acetate	≥1.0 - ≤5.0	108-65-6
n-butyl acetate	≥1.0 - ≤5.0	123-86-4
acetone	≥1.0 - ≤5.0	67-64-1
benzyl butyl phthalate	<1.0	85-68-7
4-methylpentan-2-one	<1.0	108-10-1
ethylbenzene	<1.0	100-41-4

SUB codes represent substances without registered CAS Numbers.

Any concentration shown as a range is to protect confidentiality or is due to batch variation.

There are no additional ingredients present which, within the current knowledge of the supplier and in the concentrations applicable, are classified as hazardous to health or the environment and hence require reporting in this section.

Occupational exposure limits, if available, are listed in Section 8.

Section 4. First aid measures

If ingestion, irritation, any type of overexposure or symptoms of overexposure occur during or persists after use of this product, contact a POISON CONTROL CENTER, EMERGENCY ROOM OR PHYSICIAN immediately; have Safety Data Sheet information available. Never give anything by mouth to an unconscious or convulsing person.

Description of necessary first aid measures

Eye contact : Remove contact lenses, irrigate copiously with clean, fresh water, holding the eyelids apart for at least 10 minutes and seek immediate medical advice.

Inhalation : Remove to fresh air. Keep person warm and at rest. If not breathing, if breathing is irregular or if respiratory arrest occurs, provide artificial respiration or oxygen by trained personnel.

Skin contact : Remove contaminated clothing and shoes. Wash skin thoroughly with soap and water or use recognized skin cleanser. Do NOT use solvents or thinners.

Ingestion : If swallowed, seek medical advice immediately and show this container or label. Keep person warm and at rest. Do NOT induce vomiting.

Most important symptoms/effects, acute and delayed

Potential acute health effects

Eye contact : Causes serious eye irritation.

Inhalation : May cause respiratory irritation.

Skin contact : Causes skin irritation. Defatting to the skin.

Ingestion : No known significant effects or critical hazards.

Over-exposure signs/symptoms

Section 4. First aid measures

Eye contact : Adverse symptoms may include the following:
pain or irritation
watering
redness

Inhalation : Adverse symptoms may include the following:
respiratory tract irritation
coughing
reduced fetal weight
increase in fetal deaths
skeletal malformations

Skin contact : Adverse symptoms may include the following:
irritation
redness
dryness
cracking
reduced fetal weight
increase in fetal deaths
skeletal malformations

Ingestion : Adverse symptoms may include the following:
reduced fetal weight
increase in fetal deaths
skeletal malformations

Indication of immediate medical attention and special treatment needed, if necessary

Notes to physician : In case of inhalation of decomposition products in a fire, symptoms may be delayed. The exposed person may need to be kept under medical surveillance for 48 hours.

Specific treatments : No specific treatment.

Protection of first-aiders : No action shall be taken involving any personal risk or without suitable training. If it is suspected that fumes are still present, the rescuer should wear an appropriate mask or self-contained breathing apparatus. It may be dangerous to the person providing aid to give mouth-to-mouth resuscitation. Wash contaminated clothing thoroughly with water before removing it, or wear gloves.

See toxicological information (Section 11)

Section 5. Fire-fighting measures

Extinguishing media

Suitable extinguishing media : Use dry chemical, CO_2, water spray (fog) or foam.

Unsuitable extinguishing media : Do not use water jet.

Specific hazards arising from the chemical : Highly flammable liquid and vapor. In a fire or if heated, a pressure increase will occur and the container may burst, with the risk of a subsequent explosion. Runoff to sewer may create fire or explosion hazard.

Section 5. Fire-fighting measures

Hazardous thermal decomposition products : Decomposition products may include the following materials:
carbon oxides
halogenated compounds
carbonyl halides
metal oxide/oxides

Special protective actions for fire-fighters : Promptly isolate the scene by removing all persons from the vicinity of the incident if there is a fire. No action shall be taken involving any personal risk or without suitable training. Move containers from fire area if this can be done without risk. Use water spray to keep fire-exposed containers cool.

Special protective equipment for fire-fighters : Fire-fighters should wear appropriate protective equipment and self-contained breathing apparatus (SCBA) with a full face-piece operated in positive pressure mode.

Section 6. Accidental release measures

Personal precautions, protective equipment and emergency procedures

For non-emergency personnel : No action shall be taken involving any personal risk or without suitable training. Evacuate surrounding areas. Keep unnecessary and unprotected personnel from entering. Do not touch or walk through spilled material. Shut off all ignition sources. No flares, smoking or flames in hazard area. Avoid breathing vapor or mist. Provide adequate ventilation. Wear appropriate respirator when ventilation is inadequate. Put on appropriate personal protective equipment.

For emergency responders : If specialized clothing is required to deal with the spillage, take note of any information in Section 8 on suitable and unsuitable materials. See also the information in "For non-emergency personnel".

Environmental precautions : Avoid dispersal of spilled material and runoff and contact with soil, waterways, drains and sewers. Inform the relevant authorities if the product has caused environmental pollution (sewers, waterways, soil or air).

Methods and materials for containment and cleaning up

Small spill : Stop leak if without risk. Move containers from spill area. Use spark-proof tools and explosion-proof equipment. Dilute with water and mop up if water-soluble. Alternatively, or if water-insoluble, absorb with an inert dry material and place in an appropriate waste disposal container. Dispose of via a licensed waste disposal contractor.

Large spill : Stop leak if without risk. Move containers from spill area. Use spark-proof tools and explosion-proof equipment. Approach release from upwind. Prevent entry into sewers, water courses, basements or confined areas. Wash spillages into an effluent treatment plant or proceed as follows. Contain and collect spillage with non-combustible, absorbent material e.g. sand, earth, vermiculite or diatomaceous earth and place in container for disposal according to local regulations (see Section 13). Dispose of via a licensed waste disposal contractor. Contaminated absorbent material may pose the same hazard as the spilled product. Note: see Section 1 for emergency contact information and Section 13 for waste disposal.

Section 7. Handling and storage

Precautions for safe handling

Protective measures : Put on appropriate personal protective equipment (see Section 8). Avoid exposure - obtain special instructions before use. Avoid exposure during pregnancy. Do not handle until all safety precautions have been read and understood. Do not get in eyes or on skin or clothing. Do not ingest. Avoid breathing vapor or mist. Use only with adequate ventilation. Wear appropriate respirator when ventilation is inadequate. Do not enter storage areas and confined spaces unless adequately ventilated. Keep in the original container or an approved alternative made from a compatible material, kept tightly closed when not in use. Store and use away from heat, sparks, open flame or any other ignition source. Use explosion-proof electrical (ventilating, lighting and material handling) equipment. Use only non-sparking tools. Take precautionary measures against electrostatic discharges. Empty containers retain product residue and can be hazardous. Do not reuse container.

Special precautions : If this material is part of a multiple component system, read the Safety Data Sheet(s) for the other component or components before blending as the resulting mixture may have the hazards of all of its parts.

Advice on general occupational hygiene : Eating, drinking and smoking should be prohibited in areas where this material is handled, stored and processed. Workers should wash hands and face before eating, drinking and smoking. Remove contaminated clothing and protective equipment before entering eating areas. See also Section 8 for additional information on hygiene measures.

Conditions for safe storage, including any incompatibilities : Do not store below the following temperature: 5°C (41°F). Store in accordance with local regulations. Store in a segregated and approved area. Store in original container protected from direct sunlight in a dry, cool and well-ventilated area, away from incompatible materials (see Section 10) and food and drink. Store locked up. Eliminate all ignition sources. Separate from oxidizing materials. Keep container tightly closed and sealed until ready for use. Containers that have been opened must be carefully resealed and kept upright to prevent leakage. Do not store in unlabeled containers. Use appropriate containment to avoid environmental contamination.

Section 8. Exposure controls/personal protection

Control parameters

Occupational exposure limits

Ingredient name	Exposure limits
4-chloro-α,α,α-trifluorotoluene	**IPEL (PPG).** TWA: 0.57 ppm STEL: 1.71 ppm
titanium dioxide	**OSHA PEL (United States, 5/2018).** TWA: 15 mg/m³ 8 hours. Form: Total dust **ACGIH TLV (United States, 3/2020).** TWA: 10 mg/m³ 8 hours.
Talc , not containing asbestiform fibres	**ACGIH TLV (United States, 3/2020).** TWA: 2 mg/m³ 8 hours. Form: Respirable **OSHA PEL Z3 (United States).** TWA: 2 mg/m³
Kaolin	**ACGIH TLV (United States, 3/2020).** TWA: 2 mg/m³ 8 hours. Form: Respirable fraction

Section 8. Exposure controls/personal protection

	OSHA PEL (United States, 5/2018). TWA: 5 mg/m³ 8 hours. Form: Respirable fraction TWA: 15 mg/m³ 8 hours. Form: Total dust
2-methoxy-1-methylethyl acetate	**IPEL (PPG, 10/2017). Absorbed through skin.** TWA: 30 ppm STEL: 90 ppm
n-butyl acetate	**OSHA PEL (United States, 5/2018).** TWA: 710 mg/m³ 8 hours. TWA: 150 ppm 8 hours. **ACGIH TLV (United States, 3/2020).** STEL: 150 ppm 15 minutes. TWA: 50 ppm 8 hours.
acetone	**ACGIH TLV (United States, 3/2020).** STEL: 500 ppm 15 minutes. TWA: 250 ppm 8 hours. **OSHA PEL (United States, 5/2018).** TWA: 2400 mg/m³ 8 hours. TWA: 1000 ppm 8 hours.
benzyl butyl phthalate	None.
4-methylpentan-2-one	**ACGIH TLV (United States, 3/2020).** STEL: 75 ppm 15 minutes. TWA: 20 ppm 8 hours. **OSHA PEL (United States, 5/2018).** TWA: 410 mg/m³ 8 hours. TWA: 100 ppm 8 hours.
ethylbenzene	**ACGIH TLV (United States, 3/2020).** TWA: 20 ppm 8 hours. **OSHA PEL (United States, 5/2018).** TWA: 435 mg/m³ 8 hours. TWA: 100 ppm 8 hours.

Key to abbreviations

A	= Acceptable Maximum Peak	S	= Potential skin absorption
ACGIH	= American Conference of Governmental Industrial Hygienists.	SR	= Respiratory sensitization
C	= Ceiling Limit	SS	= Skin sensitization
F	= Fume	STEL	= Short term Exposure limit values
IPEL	= Internal Permissible Exposure Limit	TD	= Total dust
OSHA	= Occupational Safety and Health Administration.	TLV	= Threshold Limit Value
R	= Respirable	TWA	= Time Weighted Average
Z	= OSHA 29 CFR 1910.1200 Subpart Z - Toxic and Hazardous Substances		

Consult local authorities for acceptable exposure limits.

Recommended monitoring procedures : If this product contains ingredients with exposure limits, personal, workplace atmosphere or biological monitoring may be required to determine the effectiveness of the ventilation or other control measures and/or the necessity to use respiratory protective equipment. Reference should be made to appropriate monitoring standards. Reference to national guidance documents for methods for the determination of hazardous substances will also be required.

Section 8. Exposure controls/personal protection

Appropriate engineering controls : Use only with adequate ventilation. Use process enclosures, local exhaust ventilation or other engineering controls to keep worker exposure to airborne contaminants below any recommended or statutory limits. The engineering controls also need to keep gas, vapor or dust concentrations below any lower explosive limits. Use explosion-proof ventilation equipment.

Environmental exposure controls : Emissions from ventilation or work process equipment should be checked to ensure they comply with the requirements of environmental protection legislation. In some cases, fume scrubbers, filters or engineering modifications to the process equipment will be necessary to reduce emissions to acceptable levels.

Individual protection measures

Hygiene measures : Wash hands, forearms and face thoroughly after handling chemical products, before eating, smoking and using the lavatory and at the end of the working period. Appropriate techniques should be used to remove potentially contaminated clothing. Wash contaminated clothing before reusing. Ensure that eyewash stations and safety showers are close to the workstation location.

Eye/face protection : Chemical splash goggles.

Skin protection

Hand protection : Chemical-resistant, impervious gloves complying with an approved standard should be worn at all times when handling chemical products if a risk assessment indicates this is necessary. Considering the parameters specified by the glove manufacturer, check during use that the gloves are still retaining their protective properties. It should be noted that the time to breakthrough for any glove material may be different for different glove manufacturers. In the case of mixtures, consisting of several substances, the protection time of the gloves cannot be accurately estimated.

Gloves : For prolonged or repeated handling, use the following type of gloves:

Recommended: butyl rubber
Not recommended: nitrile rubber
May be used: Chloroprene

Body protection : Personal protective equipment for the body should be selected based on the task being performed and the risks involved and should be approved by a specialist before handling this product. When there is a risk of ignition from static electricity, wear anti-static protective clothing. For the greatest protection from static discharges, clothing should include anti-static overalls, boots and gloves.

Other skin protection : Appropriate footwear and any additional skin protection measures should be selected based on the task being performed and the risks involved and should be approved by a specialist before handling this product.

Respiratory protection : Respirator selection must be based on known or anticipated exposure levels, the hazards of the product and the safe working limits of the selected respirator. If workers are exposed to concentrations above the exposure limit, they must use appropriate, certified respirators. Use a properly fitted, air-purifying or air-fed respirator complying with an approved standard if a risk assessment indicates this is necessary.

Section 9. Physical and chemical properties

Appearance

Physical state	:	Liquid.
Color	:	Not available.
Odor	:	Not available.
Odor threshold	:	Not available.
pH	:	Not applicable.
Melting point	:	Not available.
Boiling point	:	>37.78°C (>100°F)
Flash point	:	Closed cup: 21.67°C (71°F)
Auto-ignition temperature	:	Not available.
Decomposition temperature	:	Not available.
Flammability (solid, gas)	:	Not available.
Lower and upper explosive (flammable) limits	:	Not available.
Evaporation rate	:	Not available.
Vapor pressure	:	Not available.
Vapor density	:	Not available.
Relative density	:	1.5
Density (lbs / gal)	:	12.52
Solubility	:	Insoluble in the following materials: cold water.
Partition coefficient: n-octanol/water	:	Not applicable.
Viscosity	:	Kinematic (40°C (104°F)): >0.21 cm^2/s (>21 cSt)
Volatility	:	60% (v/v), 48.375% (w/w)
% Solid. (w/w)	:	51.625

Section 10. Stability and reactivity

Reactivity	:	No specific test data related to reactivity available for this product or its ingredients.
Chemical stability	:	The product is stable.
Possibility of hazardous reactions	:	Under normal conditions of storage and use, hazardous reactions will not occur.
Conditions to avoid	:	When exposed to high temperatures may produce hazardous decomposition products. Refer to protective measures listed in sections 7 and 8.
Incompatible materials	:	Keep away from the following materials to prevent strong exothermic reactions: oxidizing agents, strong alkalis, strong acids.
Hazardous decomposition products	:	Depending on conditions, decomposition products may include the following materials: carbon oxides halogenated compounds carbonyl halides metal oxide/oxides

Section 11. Toxicological information

Information on toxicological effects

Acute toxicity

Product/ingredient name	Result	Species	Dose	Exposure
[illegible]-chloro-α,α,α-trifluorotoluene	LC50 Inhalation Vapor	Rat	33080 mg/m³	4 hours
	LD50 Dermal	Rabbit	>2.7 g/kg	-
	LD50 Oral	Rat	13 g/kg	-
titanium dioxide	LC50 Inhalation Dusts and mists	Rat	>6.82 mg/l	4 hours
	LD50 Dermal	Rabbit	>5000 mg/kg	-
	LD50 Oral	Rat	>5000 mg/kg	-
Kaolin	LC50 Inhalation Dusts and mists	Rat	>5.07 mg/l	4 hours
	LD50 Oral	Rat	>5000 mg/kg	-
2-methoxy-1-methylethyl acetate	LD50 Dermal	Rabbit	>5 g/kg	-
	LD50 Oral	Rat	6190 mg/kg	-
n-butyl acetate	LC50 Inhalation Vapor	Rat	>21.1 mg/l	4 hours
	LC50 Inhalation Vapor	Rat	2000 ppm	4 hours
	LD50 Dermal	Rabbit	>17600 mg/kg	-
	LD50 Oral	Rat	10.768 g/kg	-
acetone	LC50 Inhalation Vapor	Rat	76000 mg/m³	4 hours
	LD50 Dermal	Rabbit	15.8 g/kg	-
	LD50 Oral	Rat	5800 mg/kg	-
benzyl butyl phthalate	LC50 Inhalation Vapor	Rat	>6700 mg/m³	4 hours
	LD50 Dermal	Rabbit	>10 g/kg	-
	LD50 Dermal	Rat	6700 mg/kg	-
	LD50 Oral	Rat	2.33 g/kg	-
4-methylpentan-2-one	LC50 Inhalation Vapor	Rat	12.3 mg/l	4 hours
	LD50 Dermal	Rabbit	>5000 mg/kg	-
	LD50 Oral	Rat	2.08 g/kg	-
ethylbenzene	LC50 Inhalation Vapor	Rat	17.8 mg/l	4 hours
	LD50 Dermal	Rabbit	17.8 g/kg	-
	LD50 Oral	Rat	3.5 g/kg	-

Conclusion/Summary : There are no data available on the mixture itself.

Irritation/Corrosion

Conclusion/Summary

Skin : There are no data available on the mixture itself.

Eyes : There are no data available on the mixture itself.

Respiratory : There are no data available on the mixture itself.

Sensitization

Conclusion/Summary

Skin : There are no data available on the mixture itself.

Respiratory : There are no data available on the mixture itself.

Mutagenicity

Conclusion/Summary : There are no data available on the mixture itself.

Carcinogenicity

Conclusion/Summary : There are no data available on the mixture itself.

Classification

Section 11. Toxicological information

Product/ingredient name	OSHA	IARC	NTP
4-chloro-α,α,α-trifluorotoluene	-	2B	-
titanium dioxide	-	2B	-
benzyl butyl phthalate	-	3	-
4-methylpentan-2-one	-	2B	-
ethylbenzene	-	2B	-

Carcinogen Classification code:

IARC: 1, 2A, 2B, 3, 4
NTP: Known to be a human carcinogen; Reasonably anticipated to be a human carcinogen
OSHA: +
Not listed/not regulated: -

Reproductive toxicity

Conclusion/Summary : There are no data available on the mixture itself.

Teratogenicity

Conclusion/Summary : There are no data available on the mixture itself.

Specific target organ toxicity (single exposure)

Name	Category	Route of exposure	Target organs
4-chloro-α,α,α-trifluorotoluene	Category 3	-	Respiratory tract irritation
Talc , not containing asbestiform fibres	Category 3	-	Respiratory tract irritation
2-methoxy-1-methylethyl acetate	Category 3	-	Narcotic effects
n-butyl acetate	Category 3	-	Narcotic effects
acetone	Category 3	-	Narcotic effects
4-methylpentan-2-one	Category 3	-	Respiratory tract irritation

Specific target organ toxicity (repeated exposure)

Name	Category	Route of exposure	Target organs
ethylbenzene	Category 2	-	hearing organs

Target organs : Contains material which causes damage to the following organs: brain, central nervous system (CNS).
Contains material which may cause damage to the following organs: kidneys, lungs, liver, gastrointestinal tract, cardiovascular system, upper respiratory tract, skin, adrenal, eye, lens or cornea, stomach.

Aspiration hazard

Name	Result
ethylbenzene	ASPIRATION HAZARD - Category 1

Information on the likely routes of exposure

Potential acute health effects

Eye contact : Causes serious eye irritation.
Inhalation : May cause respiratory irritation.

Section 11. Toxicological information

Skin contact : Causes skin irritation. Defatting to the skin.

Ingestion : No known significant effects or critical hazards.

Over-exposure signs/symptoms

Eye contact : Adverse symptoms may include the following:
pain or irritation
watering
redness

Inhalation : Adverse symptoms may include the following:
respiratory tract irritation
coughing
reduced fetal weight
increase in fetal deaths
skeletal malformations

Skin contact : Adverse symptoms may include the following:
irritation
redness
dryness
cracking
reduced fetal weight
increase in fetal deaths
skeletal malformations

Ingestion : Adverse symptoms may include the following:
reduced fetal weight
increase in fetal deaths
skeletal malformations

Delayed and immediate effects and also chronic effects from short and long term exposure

Conclusion/Summary : There are no data available on the mixture itself. This product contains TiO2 which has been classified as a GHS Carcinogen Category 2 based on its IARC 2B classification. For many PPG products, TiO2 is utilized as a raw material in a liquid coating formulation. In this case, the TiO2 particles are bound in a matrix with no meaningful potential for human exposure to unbound particles of TiO2 when the product is applied with a brush or roller. Sanding the coating surface or mist from spray applications may be harmful depending on the duration and level of exposure and require the use of appropriate personal protective equipment and/or engineering controls (see Section 8). Exposure to component solvent vapor concentrations in excess of the stated occupational exposure limit may result in adverse health effects such as mucous membrane and respiratory system irritation and adverse effects on the kidneys, liver and central nervous system. Symptoms and signs include headache, dizziness, fatigue, muscular weakness, drowsiness and, in extreme cases, loss of consciousness. Solvents may cause some of the above effects by absorption through the skin. There is some evidence that repeated exposure to organic solvent vapors in combination with constant loud noise can cause greater hearing loss than expected from exposure to noise alone. If splashed in the eyes, the liquid may cause irritation and reversible damage. Ingestion may cause nausea, diarrhea and vomiting. This takes into account, where known, delayed and immediate effects and also chronic effects of components from short-term and long-term exposure by oral, inhalation and dermal routes of exposure and eye contact.

Short term exposure

Potential immediate effects : There are no data available on the mixture itself.

Potential delayed effects : There are no data available on the mixture itself.

Section 11. Toxicological information

Long term exposure

Potential immediate effects : There are no data available on the mixture itself.

Potential delayed effects : There are no data available on the mixture itself.

Potential chronic health effects

General : Prolonged or repeated contact can defat the skin and lead to irritation, cracking and/or dermatitis.

Carcinogenicity : Suspected of causing cancer. Risk of cancer depends on duration and level of exposure.

Mutagenicity : No known significant effects or critical hazards.

Reproductive toxicity : May damage fertility or the unborn child.

Numerical measures of toxicity

Acute toxicity estimates

Product/ingredient name	Oral (mg/kg)	Dermal (mg/kg)	Inhalation (gases) (ppm)	Inhalation (vapors) (mg/l)	Inhalation (dusts and mists) (mg/l)
A-CHROMATIC LV SEALER - WHITE	N/A	4895.5	N/A	N/A	N/A
4-chloro-α,α,α-trifluorotoluene	13000	2500	N/A	33.08	N/A
2-methoxy-1-methylethyl acetate	6190	N/A	N/A	N/A	N/A
n-butyl acetate	10768	N/A	N/A	N/A	N/A
acetone	5800	15800	N/A	76	N/A
benzyl butyl phthalate	2330	6700	N/A	3	N/A
4-methylpentan-2-one	2080	N/A	N/A	12.3	1.5
ethylbenzene	3500	17800	N/A	17.8	1.5

Section 12. Ecological information

Toxicity

Product/ingredient name	Result	Species	Exposure
Titanium dioxide	Acute LC50 >100 mg/l Fresh water	Daphnia - Daphnia magna	48 hours
2-methoxy-1-methylethyl acetate	Acute LC50 134 mg/l Fresh water	Fish - Oncorhynchus mykiss	96 hours
n-butyl acetate	Acute LC50 18 mg/l	Fish	96 hours
acetone	Acute LC50 4.42589 ml/L Marine water	Crustaceans - Acartia tonsa - Copepodid	48 hours
	Acute LC50 5540 mg/l	Fish	96 hours
benzyl butyl phthalate	LC50 0.51 mg/l	Fish	96 hours
	Chronic EC10 0.57 mg/l Fresh water	Algae - Pseudokirchneriella subcapitata - Exponential growth phase	72 hours
4-methylpentan-2-one	Acute LC50 >179 mg/l	Fish	96 hours
ethylbenzene	Acute LC50 150 to 200 mg/l Fresh water	Fish	96 hours

Persistence and degradability

Section 12. Ecological information

Product/ingredient name	Test	Result	Dose	Inoculum
[redacted]-methoxy-1-methylethyl acetate	-	83 % - Readily - 28 days	-	-
n-butyl acetate	TEPA and OECD 301D	83 % - Readily - 28 days	-	-
acetone	-	90.9 % - Readily - 28 days	-	-
4-methylpentan-2-one	OECD 301F	83 % - Readily - 28 days	-	-

Product/ingredient name	Aquatic half-life	Photolysis	Biodegradability
[redacted]-methoxy-1-methylethyl acetate	-	-	Readily
n-butyl acetate	-	-	Readily
acetone	-	-	Readily
4-methylpentan-2-one	-	-	Readily
ethylbenzene	-	-	Readily

Bioaccumulative potential

Product/ingredient name	$LogP_{ow}$	BCF	Potential
[redacted]-methoxy-1-methylethyl acetate	0.56	-	low
n-butyl acetate	1.78	-	low
acetone	-0.24	3	low
benzyl butyl phthalate	4.73	16.22	low
4-methylpentan-2-one	1.31	-	low
ethylbenzene	3.15	79.43	low

Mobility in soil

Soil/water partition coefficient (K_{oc}) : Not available.

Section 13. Disposal considerations

Disposal methods : The generation of waste should be avoided or minimized wherever possible. Disposal of this product, solutions and any by-products should at all times comply with the requirements of environmental protection and waste disposal legislation and any regional local authority requirements. Dispose of surplus and non-recyclable products via a licensed waste disposal contractor. Waste should not be disposed of untreated to the sewer unless fully compliant with the requirements of all authorities with jurisdiction. Waste packaging should be recycled. Incineration or landfill should only be considered when recycling is not feasible. This material and its container must be disposed of in a safe way. Care should be taken when handling emptied containers that have not been cleaned or rinsed out. Empty containers or liners may retain some product residues. Vapor from product residues may create a highly flammable or explosive atmosphere inside the container. Do not cut, weld or grind used containers unless they have been cleaned thoroughly internally. Avoid dispersal of spilled material and runoff and contact with soil, waterways, drains and sewers.

Disposal should be in accordance with applicable regional, national and local laws and regulations.

Section 13. Disposal considerations

Refer to Section 7: HANDLING AND STORAGE and Section 8: EXPOSURE CONTROLS/PERSONAL PROTECTION for additional handling information and protection of employees. Section 6. Accidental release measures

14. Transport information

	DOT	IMDG	IATA
UN number	UN1263	UN1263	UN1263
UN proper shipping name	PAINT	PAINT	PAINT
Transport hazard class (es)	3	3	3
Packing group	II	II	II
Environmental hazards	No.	No.	No.
Marine pollutant substances	Not applicable.	Not applicable.	Not applicable.
Product RQ (lbs)	10183.3	Not applicable.	Not applicable.
RQ substances	(benzyl butyl phthalate, xylene)	Not applicable.	Not applicable.

Additional information

DOT : Package sizes shipped in quantities less than the product reportable quantity are not subject to the RQ (reportable quantity) transportation requirements.

IMDG : None identified.

IATA : None identified.

Special precautions for user : **Transport within user's premises:** always transport in closed containers that are upright and secure. Ensure that persons transporting the product know what to do in the event of an accident or spillage.

Transport in bulk according to IMO instruments : Not applicable.

Section 15. Regulatory information

United States

United States inventory (TSCA 8b) : All components are active or exempted.

U.S. Federal regulations :

United States - TSCA 5(a)2 - Final significant new use rules:

[illegible]-chloro-α,α,α-trifluorotoluene Listed 40 CFR 799.5089

SARA 302/304

SARA 304 RQ : Not applicable.

Composition/information on ingredients

No products were found.

SARA 311/312

Section 15. Regulatory information

Classification : FLAMMABLE LIQUIDS - Category 2
SKIN IRRITATION - Category 2
EYE IRRITATION - Category 2A
CARCINOGENICITY - Category 2
TOXIC TO REPRODUCTION - Category 1B
SPECIFIC TARGET ORGAN TOXICITY (SINGLE EXPOSURE) (Respiratory tract irritation) - Category 3
HNOC - Defatting irritant

Composition/information on ingredients

Name	%	Classification
[redacted]-chloro-α,α,α-trifluorotoluene	≥20 - ≤50	FLAMMABLE LIQUIDS - Category 3 SKIN IRRITATION - Category 2 EYE IRRITATION - Category 2A CARCINOGENICITY - Category 2 SPECIFIC TARGET ORGAN TOXICITY (SINGLE EXPOSURE) (Respiratory tract irritation) - Category 3 HNOC - Defatting irritant
titanium dioxide	≥10 - ≤20	CARCINOGENICITY - Category 2
Talc , not containing asbestiform fibres	≥5.0 - ≤10	SPECIFIC TARGET ORGAN TOXICITY (SINGLE EXPOSURE) (Respiratory tract irritation) - Category 3
2-methoxy-1-methylethyl acetate	≥1.0 - ≤5.0	FLAMMABLE LIQUIDS - Category 3 SPECIFIC TARGET ORGAN TOXICITY (SINGLE EXPOSURE) (Narcotic effects) - Category 3
n-butyl acetate	≥1.0 - ≤5.0	FLAMMABLE LIQUIDS - Category 2 SPECIFIC TARGET ORGAN TOXICITY (SINGLE EXPOSURE) (Narcotic effects) - Category 3 HNOC - Defatting irritant
acetone	≥1.0 - ≤5.0	FLAMMABLE LIQUIDS - Category 2 EYE IRRITATION - Category 2A SPECIFIC TARGET ORGAN TOXICITY (SINGLE EXPOSURE) (Narcotic effects) - Category 3 HNOC - Defatting irritant
benzyl butyl phthalate	<1.0	ACUTE TOXICITY (inhalation) - Category 3 TOXIC TO REPRODUCTION - Category 1B
4-methylpentan-2-one	<1.0	FLAMMABLE LIQUIDS - Category 2 ACUTE TOXICITY (inhalation) - Category 4 EYE IRRITATION - Category 2A CARCINOGENICITY - Category 2 SPECIFIC TARGET ORGAN TOXICITY (SINGLE EXPOSURE) (Respiratory tract irritation) - Category 3 HNOC - Defatting irritant
ethylbenzene	<1.0	FLAMMABLE LIQUIDS - Category 2 ACUTE TOXICITY (inhalation) - Category 4 CARCINOGENICITY - Category 2 SPECIFIC TARGET ORGAN TOXICITY (REPEATED EXPOSURE) - Category 2 ASPIRATION HAZARD - Category 1 HNOC - Defatting irritant

SARA 313

Chemical name	CAS number	Concentration

Section 15. Regulatory information

Supplier notification	: 4-methylpentan-2-one	108-10-1	0.1 - 1
	ethylbenzene	100-41-4	0.1 - 1

SARA 313 notifications must not be detached from the SDS and any copying and redistribution of the SDS shall include copying and redistribution of the notice attached to copies of the SDS subsequently redistributed.

Additional environmental information is contained on the Environmental Data Sheet for this product, which can be obtained from your PPG representative.

California Prop. 65

⚠ **WARNING**: Cancer and Reproductive Harm - www.P65Warnings.ca.gov.

Section 16. Other information

Hazardous Material Information System (U.S.A.)

Health : 2 * **Flammability** : 3 **Physical hazards** : 0

(*) - Chronic effects

Caution: HMIS® ratings are based on a 0-4 rating scale, with 0 representing minimal hazards or risks, and 4 representing significant hazards or risks. Although HMIS® ratings and the associated label are not required on MSDSs or products leaving a facility under 29 CFR 1910.1200, the preparer may choose to provide them. HMIS® ratings are to be used with a fully implemented HMIS® program. HMIS® is a registered trademark and service mark of the American Coatings Association, Inc.

The customer is responsible for determining the PPE code for this material. For more information on HMIS® Personal Protective Equipment (PPE) codes, consult the HMIS® Implementation Manual.

National Fire Protection Association (U.S.A.)

Health : 2 **Flammability** : 3 **Instability** : 0

Date of previous issue : **1/27/2021**

Organization that prepared the SDS : EHS

Key to abbreviations : ATE = Acute Toxicity Estimate
BCF = Bioconcentration Factor
GHS = Globally Harmonized System of Classification and Labelling of Chemicals
IATA = International Air Transport Association
IBC = Intermediate Bulk Container
IMDG = International Maritime Dangerous Goods
LogPow = logarithm of the octanol/water partition coefficient
MARPOL = International Convention for the Prevention of Pollution From Ships, 1973 as modified by the Protocol of 1978. ("Marpol" = marine pollution)
N/A = Not available
SGG = Segregation Group
UN = United Nations

◤ **Indicates information that has changed from previously issued version.**

Disclaimer

The information contained in this data sheet is based on present scientific and technical knowledge. The purpose of this information is to draw attention to the health and safety aspects concerning the products supplied by PPG, and to recommend precautionary measures for the storage and handling of the products. No warranty or guarantee is given in respect of the properties of the products. No liability can be accepted for any failure to observe the precautionary measures described in this data sheet or for any misuse of the products.

OneChoice
A Universal Ancillary Brand

OC-42

Solvent Cleaners

SX Cleaners

ONECHOICE® SX Solvent Cleaners are specifically designed to remove wax, grease, silicone, road tar, engine oil, overspray, adhesives and other contaminants.

They are an effective cleaner on bare metal substrates, unsanded and sanded undercoats and automotive topcoats.

SX Cleaners are packaged ready-to-use.

Features & Benefits

- Packaged ready for use
- Produces consistent results
- Increased productivity
- Lower finishing costs

Products

- SX320 Fast Evaporating Cleaner
- SX330 ACRYLI-CLEAN® Wax and Grease Remover
- SXA330 Wax and Grease Remover - Aerosol
- SX394 1.4 Low VOC Cleaner
- SX440 DITZ-O® Wax and Grease Remover

Compatible Surfaces

- OEM Surfaces
- Cured and Dried Automotive Surfaces
- Ferrous and Non-Ferrous Metals

- **These products are not recommended for use on plastic or fiberglass.**

PPG

© 2017 PPG Industries

Direction For Use

SX320:

- SX320 Fast Evaporating Cleaner should be used as a final cleaning wash prior to painting.
- Clean the surface with SX330, SX394, or SX440 as below prior to sanding, taping, priming, and sealing.
- SX320 may be used to remove surface contaminants such as finger prints left after taping.
- SX320 may be used over all OEM finishes, bare metal surfaces, and cured and dried refinish systems. **Do not use SX320 on plastic or fiberglass.**
- After final taping and prior to sealer or paint application, apply SX320 liberally to the surface to be cleaned. Wipe immediately with a clean, white cloth.
- Do not allow SX320 to dry on the surface.
- Clean an area no larger than 2' X 2' to avoid premature drying.

SX330:
SXA330:
SX394:
SX440:

- Wash surface with soap and water before cleaning.
- Clean surface before and after sanding.
- Apply a generous amount of SX330, SXA330, SX394, or SX440 with a clean, white cloth or a hand held spray bottle.
- Initial application floats contaminants to the surface. Wipe with a clean, dry cloth to remove the contaminants.
- For maximum results, wipe dry with clean, white cloth while the surface is still wet, to eliminate smearing of contaminants.

Do not use SX330, SXA330 or SX440 on plastic or fiberglass parts. Application on these surfaces can generate static build-up, which can result in flash fire.
Do not use SX440 on soluble materials like lacquer primers or topcoats.

SXA330 Can Disposal:

When the material in the aerosol can is spent, turn can upside down and depress the nozzle until all propellant is exhausted. Place empty can or cans that are no longer to be used into properly labeled metal containers. The waste containers should be managed as a hazardous waste pursuant to local, state and federal regulations.

Technical Data:

Properties:

RTS Combinations:	**SX320**	**SX330**	**SXA330**	**SX394**	**SX440**
Volume Ratio	As is	As is	As is	As is	As is
VOC Actual (g/L)	756	762	691	158	774
VOC Actual (lbs./ US Gal.)	6.31	6.36	5.77	1.32	6.46

Important:

Before opening the packages, be sure you understand the warning messages on the labels of all components, since the mixture will have the hazards of all of its parts. Improper spray technique may result in a hazardous condition. Follow spray equipment manufacturer's instructions to prevent personal injury or fire. Follow directions for respirator use. Wear eye and skin protection. Observe all applicable precautions.

See Safety Data Sheet and Labels for additional safety information and handling instructions.

EMERGENCY MEDICAL OR SPILL CONTROL INFORMATION (412) 434-4515; IN CANADA (514) 645-1320

Materials described are designed for application by professional, trained personnel using proper equipment and are not intended for sale to the public. Products mentioned may be hazardous and should only be used according to directions, while observing precautions and warning statements listed on label. Statements and methods described are based upon the best information and practices known to PPG Industries. Procedures for applications mentioned are suggestions only and are not to be construed as representations or warranties as to performance, results, or fitness for any intended use, nor does PPG Industries warrant freedom from patent infringement in the use of any formula or process set forth herein.

We protect and beautify the world™

PPG Industries
19699 Progress Drive
Strongsville, OH 44149

PPG Canada Inc.
2301 Royal Windsor Drive Unit #6
Mississauga, Ontario Canada L5J 1K5

The *PPG* Logo, *We protect and beautify the world, Acryli-Clean, Ditz-O,* and *OneChoice* are trademarks of PPG Industries Ohio, Inc.

© 2017 PPG Industries

SAFETY DATA SHEET

Date of issue/Date of revision **16 June 2020**
Version 7

Section 1. Identification

Product name	: 1.4 LOW VOC CLEANER
Product code	: SX394
Other means of identification	: Not available.
Product type	: Liquid.

Relevant identified uses of the substance or mixture and uses advised against

Product use	: Industrial applications.
Use of the substance/ mixture	: Coating. Paints. Painting-related materials.
Uses advised against	: Not applicable.

Manufacturer	: PPG Industries, Inc. One PPG Place, Pittsburgh, PA 15272
Emergency telephone number	: (412) 434-4515 (U.S.) (514) 645-1320 (Canada) SETIQ Interior de la República: 800-00-214-00 (México) SETIQ Ciudad de México: (55) 5559-1588 (México)
Technical Phone Number	: 1-800-647-6050

Section 2. Hazards identification

OSHA/HCS status	: This material is considered hazardous by the OSHA Hazard Communication Standard (29 CFR 1910.1200).
Classification of the substance or mixture	: FLAMMABLE LIQUIDS - Category 3 EYE IRRITATION - Category 2A

GHS label elements

Hazard pictograms :

Signal word	: Warning
Hazard statements	: Flammable liquid and vapor. Causes serious eye irritation.

Precautionary statements

Section 2. Hazards identification

Prevention : Wear protective gloves. Wear protective clothing. Wear eye or face protection. Keep away from heat, hot surfaces, sparks, open flames and other ignition sources. No smoking. Use explosion-proof electrical, ventilating or lighting equipment. Use non-sparking tools. Take action to prevent static discharges.

Response : IF IN EYES: Rinse cautiously with water for several minutes. Remove contact lenses, if present and easy to do. Continue rinsing. If eye irritation persists: Get medical advice or attention.

Storage : Store in a well-ventilated place. Keep cool.

Disposal : Dispose of contents and container in accordance with all local, regional, national and international regulations.

Supplemental label elements : Repeated exposure to high vapor concentrations may cause irritation of the respiratory system and permanent brain and nervous system damage. Inhalation of vapor/aerosol concentrations above the recommended exposure limits causes headaches, drowsiness and nausea and may lead to unconsciousness or death. Emits toxic fumes when heated.

Hazards not otherwise classified : None known.

Section 3. Composition/information on ingredients

Substance/mixture : Mixture

Product name : 1.4 LOW VOC CLEANER

Ingredient name	%	CAS number
Isopropyl alcohol	≥5.0 - ≤10	67-63-0
2-butoxyethanol	≥5.0 - <10	111-76-2

SUB codes represent substances without registered CAS Numbers.

Any concentration shown as a range is to protect confidentiality or is due to batch variation.

There are no additional ingredients present which, within the current knowledge of the supplier and in the concentrations applicable, are classified as hazardous to health or the environment and hence require reporting in this section.

Occupational exposure limits, if available, are listed in Section 8.

Section 4. First aid measures

If ingestion, irritation, any type of overexposure or symptoms of overexposure occur during or persists after use of this product, contact a POISON CONTROL CENTER, EMERGENCY ROOM OR PHYSICIAN immediately; have Safety Data Sheet information available. Never give anything by mouth to an unconscious or convulsing person.

Description of necessary first aid measures

Eye contact : Remove contact lenses, irrigate copiously with clean, fresh water, holding the eyelids apart for at least 10 minutes and seek immediate medical advice.

Inhalation : Remove to fresh air. Keep person warm and at rest. If not breathing, if breathing is irregular or if respiratory arrest occurs, provide artificial respiration or oxygen by trained personnel.

Skin contact : Remove contaminated clothing and shoes. Wash skin thoroughly with soap and water or use recognized skin cleanser. Do NOT use solvents or thinners.

Section 4. First aid measures

Ingestion : If swallowed, seek medical advice immediately and show this container or label. Keep person warm and at rest. Do NOT induce vomiting.

Most important symptoms/effects, acute and delayed

Potential acute health effects

Eye contact : Causes serious eye irritation.
Inhalation : No known significant effects or critical hazards.
Skin contact : No known significant effects or critical hazards.
Ingestion : No known significant effects or critical hazards.

Over-exposure signs/symptoms

Eye contact : Adverse symptoms may include the following:
pain or irritation
watering
redness
Inhalation : No specific data.
Skin contact : No specific data.
Ingestion : No specific data.

Indication of immediate medical attention and special treatment needed, if necessary

Notes to physician : Treat symptomatically. Contact poison treatment specialist immediately if large quantities have been ingested or inhaled.
Specific treatments : No specific treatment.
Protection of first-aiders : No action shall be taken involving any personal risk or without suitable training. It may be dangerous to the person providing aid to give mouth-to-mouth resuscitation.

See toxicological information (Section 11)

Section 5. Fire-fighting measures

Extinguishing media

Suitable extinguishing media : Use dry chemical, CO_2, water spray (fog) or foam.
Unsuitable extinguishing media : Do not use water jet.

Specific hazards arising from the chemical : Flammable liquid and vapor. In a fire or if heated, a pressure increase will occur and the container may burst, with the risk of a subsequent explosion. Runoff to sewer may create fire or explosion hazard.
Hazardous thermal decomposition products : Decomposition products may include the following materials:
carbon oxides

Special protective actions for fire-fighters : Promptly isolate the scene by removing all persons from the vicinity of the incident if there is a fire. No action shall be taken involving any personal risk or without suitable training. Move containers from fire area if this can be done without risk. Use water spray to keep fire-exposed containers cool.
Special protective equipment for fire-fighters : Fire-fighters should wear appropriate protective equipment and self-contained breathing apparatus (SCBA) with a full face-piece operated in positive pressure mode.

Section 6. Accidental release measures

Personal precautions, protective equipment and emergency procedures

For non-emergency personnel : No action shall be taken involving any personal risk or without suitable training. Evacuate surrounding areas. Keep unnecessary and unprotected personnel from entering. Do not touch or walk through spilled material. Shut off all ignition sources. No flares, smoking or flames in hazard area. Avoid breathing vapor or mist. Provide adequate ventilation. Wear appropriate respirator when ventilation is inadequate. Put on appropriate personal protective equipment.

For emergency responders : If specialized clothing is required to deal with the spillage, take note of any information in Section 8 on suitable and unsuitable materials. See also the information in "For non-emergency personnel".

Environmental precautions : Avoid dispersal of spilled material and runoff and contact with soil, waterways, drains and sewers. Inform the relevant authorities if the product has caused environmental pollution (sewers, waterways, soil or air).

Methods and materials for containment and cleaning up

Small spill : Stop leak if without risk. Move containers from spill area. Use spark-proof tools and explosion-proof equipment. Dilute with water and mop up if water-soluble. Alternatively, or if water-insoluble, absorb with an inert dry material and place in an appropriate waste disposal container. Dispose of via a licensed waste disposal contractor.

Large spill : Stop leak if without risk. Move containers from spill area. Use spark-proof tools and explosion-proof equipment. Approach release from upwind. Prevent entry into sewers, water courses, basements or confined areas. Wash spillages into an effluent treatment plant or proceed as follows. Contain and collect spillage with non-combustible, absorbent material e.g. sand, earth, vermiculite or diatomaceous earth and place in container for disposal according to local regulations (see Section 13). Dispose of via a licensed waste disposal contractor. Contaminated absorbent material may pose the same hazard as the spilled product. Note: see Section 1 for emergency contact information and Section 13 for waste disposal.

Section 7. Handling and storage

Precautions for safe handling

Protective measures : Put on appropriate personal protective equipment (see Section 8). Do not ingest. Avoid contact with eyes, skin and clothing. Avoid breathing vapor or mist. Use only with adequate ventilation. Wear appropriate respirator when ventilation is inadequate. Do not enter storage areas and confined spaces unless adequately ventilated. Keep in the original container or an approved alternative made from a compatible material, kept tightly closed when not in use. Store and use away from heat, sparks, open flame or any other ignition source. Use explosion-proof electrical (ventilating, lighting and material handling) equipment. Use only non-sparking tools. Take precautionary measures against electrostatic discharges. Empty containers retain product residue and can be hazardous. Do not reuse container.

Special precautions : If this material is part of a multiple component system, read the Safety Data Sheet(s) for the other component or components before blending as the resulting mixture may have the hazards of all of its parts.

Section 7. Handling and storage

Advice on general occupational hygiene : Eating, drinking and smoking should be prohibited in areas where this material is handled, stored and processed. Workers should wash hands and face before eating, drinking and smoking. Remove contaminated clothing and protective equipment before entering eating areas. See also Section 8 for additional information on hygiene measures.

Conditions for safe storage, including any incompatibilities : Do not store below the following temperature: 5°C (41°F). Store in accordance with local regulations. Store in a segregated and approved area. Store in original container protected from direct sunlight in a dry, cool and well-ventilated area, away from incompatible materials (see Section 10) and food and drink. Eliminate all ignition sources. Separate from oxidizing materials. Keep container tightly closed and sealed until ready for use. Containers that have been opened must be carefully resealed and kept upright to prevent leakage. Do not store in unlabeled containers. Use appropriate containment to avoid environmental contamination.

Section 8. Exposure controls/personal protection

Control parameters

Occupational exposure limits

Ingredient name	Exposure limits
Isopropyl alcohol	**ACGIH TLV (United States, 3/2019).** STEL: 400 ppm 15 minutes. TWA: 200 ppm 8 hours. **OSHA PEL (United States, 5/2018).** TWA: 980 mg/m³ 8 hours. TWA: 400 ppm 8 hours.
2-butoxyethanol	**ACGIH TLV (United States, 3/2019).** TWA: 20 ppm 8 hours. **OSHA PEL (United States, 5/2018).** **Absorbed through skin.** TWA: 240 mg/m³ 8 hours. TWA: 50 ppm 8 hours.

Key to abbreviations

A	= Acceptable Maximum Peak	S	= Potential skin absorption
ACGIH	= American Conference of Governmental Industrial Hygienists.	SR	= Respiratory sensitization
C	= Ceiling Limit	SS	= Skin sensitization
F	= Fume	STEL	= Short term Exposure limit values
IPEL	= Internal Permissible Exposure Limit	TD	= Total dust
OSHA	= Occupational Safety and Health Administration.	TLV	= Threshold Limit Value
R	= Respirable	TWA	= Time Weighted Average
Z	= OSHA 29 CFR 1910.1200 Subpart Z - Toxic and Hazardous Substances		

Consult local authorities for acceptable exposure limits.

Recommended monitoring procedures : If this product contains ingredients with exposure limits, personal, workplace atmosphere or biological monitoring may be required to determine the effectiveness of the ventilation or other control measures and/or the necessity to use respiratory protective equipment. Reference should be made to appropriate monitoring standards. Reference to national guidance documents for methods for the determination of hazardous substances will also be required.

Section 8. Exposure controls/personal protection

Appropriate engineering controls : Use only with adequate ventilation. Use process enclosures, local exhaust ventilation or other engineering controls to keep worker exposure to airborne contaminants below any recommended or statutory limits. The engineering controls also need to keep gas, vapor or dust concentrations below any lower explosive limits. Use explosion-proof ventilation equipment.

Environmental exposure controls : Emissions from ventilation or work process equipment should be checked to ensure they comply with the requirements of environmental protection legislation. In some cases, fume scrubbers, filters or engineering modifications to the process equipment will be necessary to reduce emissions to acceptable levels.

Individual protection measures

Hygiene measures : Wash hands, forearms and face thoroughly after handling chemical products, before eating, smoking and using the lavatory and at the end of the working period. Appropriate techniques should be used to remove potentially contaminated clothing. Wash contaminated clothing before reusing. Ensure that eyewash stations and safety showers are close to the workstation location.

Eye/face protection : Chemical splash goggles.

Skin protection

Hand protection : Chemical-resistant, impervious gloves complying with an approved standard should be worn at all times when handling chemical products if a risk assessment indicates this is necessary. Considering the parameters specified by the glove manufacturer, check during use that the gloves are still retaining their protective properties. It should be noted that the time to breakthrough for any glove material may be different for different glove manufacturers. In the case of mixtures, consisting of several substances, the protection time of the gloves cannot be accurately estimated.

Body protection : Personal protective equipment for the body should be selected based on the task being performed and the risks involved and should be approved by a specialist before handling this product. When there is a risk of ignition from static electricity, wear anti-static protective clothing. For the greatest protection from static discharges, clothing should include anti-static overalls, boots and gloves.

Other skin protection : Appropriate footwear and any additional skin protection measures should be selected based on the task being performed and the risks involved and should be approved by a specialist before handling this product.

Respiratory protection : Respirator selection must be based on known or anticipated exposure levels, the hazards of the product and the safe working limits of the selected respirator. If workers are exposed to concentrations above the exposure limit, they must use appropriate, certified respirators. Use a properly fitted, air-purifying or air-fed respirator complying with an approved standard if a risk assessment indicates this is necessary.

Section 9. Physical and chemical properties

Appearance

Physical state : Liquid.

Color : Clear.

Odor : Not available.

Odor threshold : Not available.

pH : Not available.

Melting point : Not available.

Boiling point : >37.78°C (>100°F)

Section 9. Physical and chemical properties

Flash point	: Closed cup: 41.67°C (107°F)
Auto-ignition temperature	: Not available.
Decomposition temperature	: Not available.
Flammability (solid, gas)	: Not available.
Lower and upper explosive (flammable) limits	: Not available.
Evaporation rate	: Not available.
Vapor pressure	: Not available.
Vapor density	: Not available.
Relative density	: 0.97
Density (lbs / gal)	: 8.1
Solubility	: Partially soluble in the following materials: cold water.
Partition coefficient: n-octanol/water	: Not available.
Viscosity	: Kinematic (40°C (104°F)): >0.21 cm^2/s (>21 cSt)
Volatility	: 100% (v/v), 99.738% (w/w)
% Solid. (w/w)	: 0.262

Section 10. Stability and reactivity

Reactivity	: No specific test data related to reactivity available for this product or its ingredients.
Chemical stability	: The product is stable.
Possibility of hazardous reactions	: Under normal conditions of storage and use, hazardous reactions will not occur.
Conditions to avoid	: When exposed to high temperatures may produce hazardous decomposition products. Refer to protective measures listed in sections 7 and 8.
Incompatible materials	: Keep away from the following materials to prevent strong exothermic reactions: oxidizing agents, strong alkalis, strong acids.
Hazardous decomposition products	: Decomposition products may include the following materials: carbon monoxide, carbon dioxide, smoke, oxides of nitrogen.

Section 11. Toxicological information

Information on toxicological effects

Acute toxicity

Section 11. Toxicological information

Product/ingredient name	Result	Species	Dose	Exposure
Isopropyl alcohol	LC50 Inhalation Vapor	Rat	72600 mg/m³	4 hours
	LD50 Dermal	Rabbit	12800 mg/kg	-
	LD50 Oral	Rat	5045 mg/kg	-
2-butoxyethanol	LD50 Dermal	Rabbit	1060 mg/kg	-
	LD50 Oral	Rat - Male	1480 mg/kg	-

Conclusion/Summary : There are no data available on the mixture itself.

Irritation/Corrosion

Product/ingredient name	Result	Species	Score	Exposure	Observation
2-butoxyethanol	Skin - Moderate irritant	Rabbit	-	4 hours	28 days
	Eyes - Irritant	Rabbit	-	24 hours	21 days

Conclusion/Summary

Skin : There are no data available on the mixture itself.

Eyes : There are no data available on the mixture itself.

Respiratory : There are no data available on the mixture itself.

Sensitization

Conclusion/Summary

Skin : There are no data available on the mixture itself.

Respiratory : There are no data available on the mixture itself.

Mutagenicity

Conclusion/Summary : There are no data available on the mixture itself.

Carcinogenicity

Conclusion/Summary : There are no data available on the mixture itself.

Classification

Product/ingredient name	OSHA	IARC	NTP
Isopropyl alcohol	-	3	-
2-butoxyethanol	-	3	-

Carcinogen Classification code:

IARC: 1, 2A, 2B, 3, 4
NTP: Known to be a human carcinogen; Reasonably anticipated to be a human carcinogen
OSHA: +
Not listed/not regulated: -

Reproductive toxicity

Conclusion/Summary : There are no data available on the mixture itself.

Teratogenicity

Conclusion/Summary : There are no data available on the mixture itself.

Specific target organ toxicity (single exposure)

Name	Category	Route of exposure	Target organs
Isopropyl alcohol	Category 3	-	Narcotic effects

Specific target organ toxicity (repeated exposure)

Section 11. Toxicological information

Not available.

Target organs : Contains material which causes damage to the following organs: brain.
Contains material which may cause damage to the following organs: blood, kidneys, liver, spleen, lymphatic system, upper respiratory tract, skin, bone marrow, central nervous system (CNS), eye, lens or cornea.

Aspiration hazard

Not available.

Information on the likely routes of exposure

Potential acute health effects

Eye contact : Causes serious eye irritation.
Inhalation : No known significant effects or critical hazards.
Skin contact : No known significant effects or critical hazards.
Ingestion : No known significant effects or critical hazards.

Over-exposure signs/symptoms

Eye contact : Adverse symptoms may include the following:
pain or irritation
watering
redness
Inhalation : No specific data.
Skin contact : No specific data.
Ingestion : No specific data.

Delayed and immediate effects and also chronic effects from short and long term exposure

Conclusion/Summary : There are no data available on the mixture itself. Exposure to component solvent vapor concentrations in excess of the stated occupational exposure limit may result in adverse health effects such as mucous membrane and respiratory system irritation and adverse effects on the kidneys, liver and central nervous system. Symptoms and signs include headache, dizziness, fatigue, muscular weakness, drowsiness and, in extreme cases, loss of consciousness. Solvents may cause some of the above effects by absorption through the skin. There is some evidence that repeated exposure to organic solvent vapors in combination with constant loud noise can cause greater hearing loss than expected from exposure to noise alone. If splashed in the eyes, the liquid may cause irritation and reversible damage. Ingestion may cause nausea, diarrhea and vomiting. This takes into account, where known, delayed and immediate effects and also chronic effects of components from short-term and long-term exposure by oral, inhalation and dermal routes of exposure and eye contact.

Short term exposure

Potential immediate effects : There are no data available on the mixture itself.
Potential delayed effects : There are no data available on the mixture itself.

Long term exposure

Potential immediate effects : There are no data available on the mixture itself.
Potential delayed effects : There are no data available on the mixture itself.

Potential chronic health effects

General : No known significant effects or critical hazards.

Section 11. Toxicological information

Carcinogenicity : No known significant effects or critical hazards.
Mutagenicity : No known significant effects or critical hazards.
Teratogenicity : No known significant effects or critical hazards.
Developmental effects : No known significant effects or critical hazards.
Fertility effects : No known significant effects or critical hazards.

Numerical measures of toxicity

Acute toxicity estimates

Product/ingredient name	Oral (mg/kg)	Dermal (mg/kg)	Inhalation (gases) (ppm)	Inhalation (vapors) (mg/l)	Inhalation (dusts and mists) (mg/l)
1.4 LOW VOC CLEANER	18539.8	13278.5	N/A	137.8	18.8
Isopropyl alcohol	5045	12800	N/A	72.6	N/A
2-butoxyethanol	1480	1060	N/A	11	1.5

Section 12. Ecological information

Toxicity

Product/ingredient name	Result	Species	Exposure
Isopropyl alcohol	Acute EC50 10100 mg/l Fresh water	Daphnia - Daphnia magna	48 hours
2-butoxyethanol	Acute LC50 1474 mg/l	Fish	96 hours
	Chronic NOEC >100 mg/l	Fish	21 days

Persistence and degradability

Product/ingredient name	Aquatic half-life	Photolysis	Biodegradability
2-butoxyethanol	-	-	Readily

Bioaccumulative potential

Product/ingredient name	$LogP_{ow}$	BCF	Potential
Isopropyl alcohol	0.05	-	low
2-butoxyethanol	0.81	-	low

Mobility in soil

Soil/water partition coefficient (K_{oc}) : Not available.

Section 13. Disposal considerations

Disposal methods : The generation of waste should be avoided or minimized wherever possible. Disposal of this product, solutions and any by-products should at all times comply with the requirements of environmental protection and waste disposal legislation and any regional local authority requirements. Dispose of surplus and non-recyclable products via a licensed waste disposal contractor. Waste should not be disposed of untreated to the sewer unless fully compliant with the requirements of all authorities with jurisdiction. Waste packaging should be recycled. Incineration or landfill should only be considered when recycling is not feasible. This material and its container must be disposed of in a safe way. Care should be taken when handling emptied containers that have not been cleaned or rinsed out. Empty containers or liners may retain some product residues. Vapor from product residues may create a highly flammable or explosive atmosphere inside the container. Do not cut, weld or grind used containers unless they have been cleaned thoroughly internally. Avoid dispersal of spilled material and runoff and contact with soil, waterways, drains and sewers.

Disposal should be in accordance with applicable regional, national and local laws and regulations.

Refer to Section 7: HANDLING AND STORAGE and Section 8: EXPOSURE CONTROLS/PERSONAL PROTECTION for additional handling information and protection of employees. Section 6. Accidental release measures

14. Transport information

	DOT	IMDG	IATA
UN number	UN1263	UN1263	UN1263
UN proper shipping name	PAINT RELATED MATERIAL	PAINT RELATED MATERIAL	PAINT RELATED MATERIAL
Transport hazard class (es)	3	3	3
Packing group	III	III	III
Environmental hazards	No.	No.	No.
Marine pollutant substances	Not applicable.	Not applicable.	Not applicable.

Additional information

DOT : This product may be re-classified as "Combustible Liquid," unless transported by vessel or aircraft. Non-bulk packages (less than or equal to 119 gal) of combustible liquids are not regulated as hazardous materials.

IMDG : None identified.

IATA : None identified.

Special precautions for user : **Transport within user's premises:** always transport in closed containers that are upright and secure. Ensure that persons transporting the product know what to do in the event of an accident or spillage.

Transport in bulk according to IMO instruments : Not applicable.

Section 15. Regulatory information

United States

United States inventory (TSCA 8b) : All components are active or exempted.

SARA 302/304

SARA 304 RQ : Not applicable.

Composition/information on ingredients

No products were found.

SARA 311/312

Classification : FLAMMABLE LIQUIDS - Category 3
EYE IRRITATION - Category 2A

Composition/information on ingredients

Name	%	Classification
Isopropyl alcohol	≥5.0 - ≤10	FLAMMABLE LIQUIDS - Category 2 EYE IRRITATION - Category 2A SPECIFIC TARGET ORGAN TOXICITY (SINGLE EXPOSURE) (Narcotic effects) - Category 3
2-butoxyethanol	≥5.0 - <10	FLAMMABLE LIQUIDS - Category 4 ACUTE TOXICITY (oral) - Category 4 ACUTE TOXICITY (dermal) - Category 4 ACUTE TOXICITY (inhalation) - Category 4 SKIN IRRITATION - Category 2 EYE IRRITATION - Category 2A

SARA 313

	Chemical name	CAS number	Concentration
Supplier notification :	2-butoxyethanol	111-76-2	5 - 10

SARA 313 notifications must not be detached from the SDS and any copying and redistribution of the SDS shall include copying and redistribution of the notice attached to copies of the SDS subsequently redistributed.

Additional environmental information is contained on the Environmental Data Sheet for this product, which can be obtained from your PPG representative.

Section 16. Other information

Hazardous Material Information System (U.S.A.)

Health : 2 * Flammability : 2 Physical hazards : 0

(*) - Chronic effects

Caution: HMIS® ratings are based on a 0-4 rating scale, with 0 representing minimal hazards or risks, and 4 representing significant hazards or risks. Although HMIS® ratings and the associated label are not required on MSDSs or products leaving a facility under 29 CFR 1910.1200, the preparer may choose to provide them. HMIS® ratings are to be used with a fully implemented HMIS® program. HMIS® is a registered trademark and service mark of the American Coatings Association, Inc.

The customer is responsible for determining the PPE code for this material. For more information on HMIS® Personal Protective Equipment (PPE) codes, consult the HMIS® Implementation Manual.

National Fire Protection Association (U.S.A.)

Health : 2 Flammability : 2 Instability : 0

Section 16. Other information

Date of previous issue	:	**10/21/2019**
Organization that prepared the MSDS	:	EHS
Key to abbreviations	:	ATE = Acute Toxicity Estimate BCF = Bioconcentration Factor GHS = Globally Harmonized System of Classification and Labelling of Chemicals IATA = International Air Transport Association IBC = Intermediate Bulk Container IMDG = International Maritime Dangerous Goods LogPow = logarithm of the octanol/water partition coefficient MARPOL = International Convention for the Prevention of Pollution From Ships, 1973 as modified by the Protocol of 1978. ("Marpol" = marine pollution) N/A = Not available SGG = Segregation Group UN = United Nations

◤ **Indicates information that has changed from previously issued version.**

Disclaimer

The information contained in this data sheet is based on present scientific and technical knowledge. The purpose of this information is to draw attention to the health and safety aspects concerning the products supplied by PPG, and to recommend precautionary measures for the storage and handling of the products. No warranty or guarantee is given in respect of the properties of the products. No liability can be accepted for any failure to observe the precautionary measures described in this data sheet or for any misuse of the products.

OneChoice
A Universal Ancillary Brand

OC-6

ECOBASE™ 5.5 Etch Prime

SX1071

ONECHOICE® SX1071 Etch Prime is a 2 component 5.5 VOC acid etch primer specifically designed to provide excellent adhesion and corrosion resistance to properly prepared steel and aluminum while offering fast dry characteristics.

SX1071 with its catalyst SX1072 offers an enhanced level of corrosion protection to properly prepared substrates without the use of chromated pigments.

Features & Benefits

- Fast dry formula
- Adhesion to most metal substrates
- Faster through put
- Fewer products needed
- Higher productivity
- Lower finishing costs
- Non-chrome formula
- Meets 6H ASR exemption requirements

Compatible Surfaces

SX1071 Etch Prime can be applied over bare steel, aluminum, and galvanized metals after degreasing and sanding.

SX1071 may be used for spot repairs involving existing cured OEM and refinish systems. Slight overlap of SX1071 onto painted surfaces and body filler is acceptable, but should be kept to a minimum.

Compatible Products

- DELTRON® 2 Component Undercoats
- GLOBAL REFINISH SYSTEM™ 2 Component Undercoats
- ENVIROBASE® High Performance 2 Component Undercoats
- AQUABASE® Plus 2 Component Undercoats
- NEXA AUTOCOLOR® 2K® Undercoats

Note: When using SX1071 Etch Prime we recommend PPG brand primer surfacers and sealers, please refer to the products specific technical bulletin for proper application.

- ***Do Not apply NCP250 surfacer or NCS sealer directly over SX1071 Etch Prime.***
- ***Do Not apply topcoats directly over SX1071 Etch Prime***
- ***Do Not apply polyester filler directly over SX1071 Etch Prime.***

PPG

© 2016 PPG Industries

Directions for Use:

Surface Preparation:

- In all cases, wash all surfaces to be painted with soap and water, then clean with the appropriate PPG cleaner. Ensure that the substrate is thoroughly cleaned and dried both before and after application work.
- Sand the bare metal areas completely with 80 - 180 grit abrasive.
- Wash off residue and dry thoroughly before re-cleaning with appropriate PPG cleaner. The use of a tack rag is recommended.
- Etch Prime aluminum substrate as soon as possible and no later than 8 hours after cleaning steps.
- Etch Prime carbon steel immediately after cleaning.

Mix Ratio:

SX1071	:	SX1072
1	:	1

Viscosity: 11 - 14 seconds DIN 4 @ 70°F (21°C)

Pot life: 24 hours at 70°F (21°C).
Pot life is shortened as temperatures increase.

Spray Gun Set-up:

Fluid Tip: 1.3 - 1.5 mm
HVLP: 10 PSI at the cap
Compliant: 29 - 40 at the gun

Note: For best overall results, refer to spray gun manufacturer's recommendations for inlet air pressures.

Application:

Apply: 2 medium coats

Note: Do not apply excessive film builds of SX1071 Etch Prime. Total film build (2 coats) should not exceed 1.0 mils. Film builds exceeding 1.0 mil will result in slow drying and may cause poor adhesion of the etch prime to itself, substrate and undercoat.

Note: If excessive films are applied, SX1071 must be sanded and removed after 1 hour at 70°F (21°C)

Drying Times:

Between coats: 2 - 3 minutes

Dry to Prime: 15 minutes minimum at 70°F (21°C)

Note: SX1071 must be topcoated with a compatible surfacer or sealer before applying a topcoat. If left uncoated for more than 24 hours, lightly scuff and apply an additional coat.

Do not apply color topcoats or clearcoats directly over SX1071

Equipment Cleaning:

Spray guns, gun cups, storage pots etc. should be cleaned thoroughly after each use with a compliant cleaning solvent.

© 2016 PPG Industries

Technical Data

Properties:

RTS Combinations:	SX1071 : SX1072
Volume Ratio	1 : 1
Applicable Use Category	Pretreatment Coating
VOC Actual (g/L)	276
VOC Actual (lbs./gal.)	2.30
VOC Regulatory (less water less exempt) (g/L)	639
VOC Regulatory (less water less exempt) (lbs./gal.)	5.33
Density (g/L)	1091
Density (lbs./gal.)	9.10
Volatiles wt. %	84.1
Water wt. %	0.3
Exempt wt. %	58.6
Water vol. %	0.3
Exempt vol. %	56.5
Solids by weight (RTS)	15.9
Solids by volume (RTS)	9.9
Acid Content, wt. %	0.99

See Material Safety Data Sheet and Labels for additional safety information and handling instructions.

EMERGENCY MEDICAL OR SPILL CONTROL INFORMATION (412) 434-4515; IN CANADA (514) 645-1320

Materials described are designed for application by professional, trained personnel using proper equipment and are not intended for sale to the public. Products mentioned may be hazardous and should only be used according to directions, while observing precautions and warning statements listed on label. Statements and methods described are based upon the best information and practices known to PPG Industries. Procedures for applications mentioned are suggestions only and are not to be construed as representations or warranties as to performance, results, or fitness for any intended use, nor does PPG Industries warrant freedom from patent infringement in the use of any formula or process set forth herein.

We protect and beautify the world

PPG Industries
19699 Progress Drive
Strongsville, OH 44149

PPG Canada Inc.
2301 Royal Windsor Drive Unit #6
Mississauga, Ontario Canada L5J 1K5

The *PPG* Logo, *Bringing innovation to the surface, OneChoice, Deltron, Global Refinish System, Envirobase, Aquabase, Nexa Autocolor* and *Ecobase* are trademarks of PPG Industries Ohio, Inc.

© 2016 PPG Industries

SAFETY DATA SHEET

Date of issue/Date of revision **5 August 2020**
Version 21.01

Section 1. Identification

Product name	: ECOBASE™ 5.5 Etch Prime
Product code	: SX1071
Other means of identification	: Not available.
Product type	: Liquid.

Relevant identified uses of the substance or mixture and uses advised against

Product use	: Industrial applications.
Use of the substance/ mixture	: Coating. Paints. Painting-related materials.
Uses advised against	: Not applicable.

Manufacturer	: PPG Industries, Inc. One PPG Place, Pittsburgh, PA 15272
Emergency telephone number	: (412) 434-4515 (U.S.) (514) 645-1320 (Canada) SETIQ Interior de la República: 800-00-214-00 (México) SETIQ Ciudad de México: (55) 5559-1588 (México)
Technical Phone Number	: 1-800-647-6050

Section 2. Hazards identification

OSHA/HCS status	: This material is considered hazardous by the OSHA Hazard Communication Standard (29 CFR 1910.1200).
Classification of the substance or mixture	: FLAMMABLE LIQUIDS - Category 2 SKIN IRRITATION - Category 2 SERIOUS EYE DAMAGE - Category 1 SKIN SENSITIZATION - Category 1 CARCINOGENICITY - Category 1B SPECIFIC TARGET ORGAN TOXICITY (SINGLE EXPOSURE) (Respiratory tract irritation) - Category 3 SPECIFIC TARGET ORGAN TOXICITY (SINGLE EXPOSURE) (Narcotic effects) - Category 3 Percentage of the mixture consisting of ingredient(s) of unknown acute toxicity: 6% (Oral), 22.8% (Dermal), 16.4% (Inhalation)

Section 2. Hazards identification

This product contains TiO2 which has been classified as a GHS Carcinogen Category 2 based on its IARC 2B classification. For many PPG products, TiO2 is utilized as a raw material in a liquid coating formulation. In this case, the TiO2 particles are bound in a matrix with no meaningful potential for human exposure to unbound particles of TiO2 when the product is applied with a brush or roller. Sanding the coating surface or mist from spray applications may be harmful depending on the duration and level of exposure and require the use of appropriate personal protective equipment and/or engineering controls (see Section 8).

GHS label elements

Hazard pictograms :

Signal word : Danger

Hazard statements : Highly flammable liquid and vapor.
Causes skin irritation.
May cause an allergic skin reaction.
Causes serious eye damage.
May cause respiratory irritation.
May cause drowsiness or dizziness.
May cause cancer.

Precautionary statements

Prevention : Obtain special instructions before use. Do not handle until all safety precautions have been read and understood. Wear protective gloves, protective clothing and eye or face protection. Keep away from heat, hot surfaces, sparks, open flames and other ignition sources. No smoking. Use explosion-proof electrical, ventilating or lighting equipment. Use non-sparking tools. Take action to prevent static discharges. Use only outdoors or in a well-ventilated area. Avoid breathing vapor. Wash thoroughly after handling. Contaminated work clothing must not be allowed out of the workplace.

Response : IF exposed or concerned: Get medical advice or attention. IF INHALED: Remove person to fresh air and keep comfortable for breathing. Call a POISON CENTER or doctor if you feel unwell. IF ON SKIN (or hair): Take off immediately all contaminated clothing. Rinse skin with water. Wash contaminated clothing before reuse. IF ON SKIN: Wash with plenty of water. If skin irritation or rash occurs: Get medical advice or attention. IF IN EYES: Rinse cautiously with water for several minutes. Remove contact lenses, if present and easy to do. Continue rinsing. Immediately call a POISON CENTER or doctor.

Storage : Store locked up. Store in a well-ventilated place. Keep container tightly closed. Keep cool.

Disposal : Dispose of contents and container in accordance with all local, regional, national and international regulations.

Supplemental label elements : Sanding and grinding dusts may be harmful if inhaled. Trimethoxysilanes are capable of forming methanol if hydrolyzed or ingested. If swallowed, methanol may be harmful or fatal or cause blindness. Repeated exposure to high vapor concentrations may cause irritation of the respiratory system and permanent brain and nervous system damage. Inhalation of vapor/aerosol concentrations above the recommended exposure limits causes headaches, drowsiness and nausea and may lead to unconsciousness or death. Avoid contact with skin and clothing. Wash thoroughly after handling. Emits toxic fumes when heated.

Section 2. Hazards identification

Hazards not otherwise classified : Prolonged or repeated contact may dry skin and cause irritation.

Section 3. Composition/information on ingredients

Substance/mixture : Mixture
Product name : ECOBASE™ 5.5 Etch Prime

Ingredient name	%	CAS number
butan-1-ol	≥20 - ≤33	71-36-3
acetone	≥10 - ≤20	67-64-1
4-chloro-α,α,α-trifluorotoluene	≥10 - ≤20	98-56-6
Solvent naphtha (petroleum), heavy arom.	≥5.0 - ≤10	64742-94-5
bis-[4-(2,3-epoxipropoxi)phenyl]propane	≥5.0 - ≤10	1675-54-3
2-methylpropan-1-ol	≥5.0 - ≤10	78-83-1
zinc oxide	≥1.0 - ≤5.0	1314-13-2
titanium dioxide	≥1.0 - ≤5.0	13463-67-7
[3-(2,3-epoxypropoxy)propyl]trimethoxysilane	≥1.0 - ≤5.0	2530-83-8
2-butoxyethanol	≥1.0 - ≤3.0	111-76-2
3-butoxypropan-2-ol	≥0.10 - ≤2.3	5131-66-8
xylene	≥0.10 - ≤2.2	1330-20-7
naphthalene	<1.0	91-20-3
ethylbenzene	<1.0	100-41-4
carbon black, respirable powder	<1.0	1333-86-4

SUB codes represent substances without registered CAS Numbers.

Any concentration shown as a range is to protect confidentiality or is due to batch variation.

There are no additional ingredients present which, within the current knowledge of the supplier and in the concentrations applicable, are classified as hazardous to health or the environment and hence require reporting in this section.

Occupational exposure limits, if available, are listed in Section 8.

Section 4. First aid measures

If ingestion, irritation, any type of overexposure or symptoms of overexposure occur during or persists after use of this product, contact a POISON CONTROL CENTER, EMERGENCY ROOM OR PHYSICIAN immediately; have Safety Data Sheet information available. Never give anything by mouth to an unconscious or convulsing person.

Description of necessary first aid measures

Eye contact : Check for and remove any contact lenses. Immediately flush eyes with running water for at least 15 minutes, keeping eyelids open. Seek immediate medical attention.

Inhalation : Remove to fresh air. Keep person warm and at rest. If not breathing, if breathing is irregular or if respiratory arrest occurs, provide artificial respiration or oxygen by trained personnel.

Skin contact : Remove contaminated clothing and shoes. Wash skin thoroughly with soap and water or use recognized skin cleanser. Do NOT use solvents or thinners.

Ingestion : If swallowed, seek medical advice immediately and show this container or label. Keep person warm and at rest. Do NOT induce vomiting.

Most important symptoms/effects, acute and delayed

Section 4. First aid measures

Potential acute health effects

Eye contact : Causes serious eye damage.

Inhalation : Can cause central nervous system (CNS) depression. May cause drowsiness or dizziness. May cause respiratory irritation.

Skin contact : Causes skin irritation. Defatting to the skin. May cause an allergic skin reaction.

Ingestion : Can cause central nervous system (CNS) depression.

Over-exposure signs/symptoms

Eye contact : Adverse symptoms may include the following:
pain
watering
redness

Inhalation : Adverse symptoms may include the following:
respiratory tract irritation
coughing
nausea or vomiting
headache
drowsiness/fatigue
dizziness/vertigo
unconsciousness

Skin contact : Adverse symptoms may include the following:
pain or irritation
redness
dryness
cracking
blistering may occur

Ingestion : Adverse symptoms may include the following:
stomach pains

Indication of immediate medical attention and special treatment needed, if necessary

Notes to physician : In case of inhalation of decomposition products in a fire, symptoms may be delayed. The exposed person may need to be kept under medical surveillance for 48 hours.

Specific treatments : No specific treatment.

Protection of first-aiders : No action shall be taken involving any personal risk or without suitable training. If it is suspected that fumes are still present, the rescuer should wear an appropriate mask or self-contained breathing apparatus. It may be dangerous to the person providing aid to give mouth-to-mouth resuscitation. Wash contaminated clothing thoroughly with water before removing it, or wear gloves.

See toxicological information (Section 11)

Section 5. Fire-fighting measures

Extinguishing media

Suitable extinguishing media : Use dry chemical, CO_2, water spray (fog) or foam.

Unsuitable extinguishing media : Do not use water jet.

Section 5. Fire-fighting measures

Specific hazards arising from the chemical : Highly flammable liquid and vapor. In a fire or if heated, a pressure increase will occur and the container may burst, with the risk of a subsequent explosion. Runoff to sewer may create fire or explosion hazard.

Hazardous thermal decomposition products : Decomposition products may include the following materials:
carbon oxides
phosphorus oxides
halogenated compounds
carbonyl halides
metal oxide/oxides

Special protective actions for fire-fighters : Promptly isolate the scene by removing all persons from the vicinity of the incident if there is a fire. No action shall be taken involving any personal risk or without suitable training. Move containers from fire area if this can be done without risk. Use water spray to keep fire-exposed containers cool.

Special protective equipment for fire-fighters : Fire-fighters should wear appropriate protective equipment and self-contained breathing apparatus (SCBA) with a full face-piece operated in positive pressure mode.

Section 6. Accidental release measures

Personal precautions, protective equipment and emergency procedures

For non-emergency personnel : No action shall be taken involving any personal risk or without suitable training. Evacuate surrounding areas. Keep unnecessary and unprotected personnel from entering. Do not touch or walk through spilled material. Shut off all ignition sources. No flares, smoking or flames in hazard area. Do not breathe vapor or mist. Provide adequate ventilation. Wear appropriate respirator when ventilation is inadequate. Put on appropriate personal protective equipment.

For emergency responders : If specialized clothing is required to deal with the spillage, take note of any information in Section 8 on suitable and unsuitable materials. See also the information in "For non-emergency personnel".

Environmental precautions : Avoid dispersal of spilled material and runoff and contact with soil, waterways, drains and sewers. Inform the relevant authorities if the product has caused environmental pollution (sewers, waterways, soil or air).

Methods and materials for containment and cleaning up

Small spill : Stop leak if without risk. Move containers from spill area. Use spark-proof tools and explosion-proof equipment. Dilute with water and mop up if water-soluble. Alternatively, or if water-insoluble, absorb with an inert dry material and place in an appropriate waste disposal container. Dispose of via a licensed waste disposal contractor.

Large spill : Stop leak if without risk. Move containers from spill area. Use spark-proof tools and explosion-proof equipment. Approach release from upwind. Prevent entry into sewers, water courses, basements or confined areas. Wash spillages into an effluent treatment plant or proceed as follows. Contain and collect spillage with non-combustible, absorbent material e.g. sand, earth, vermiculite or diatomaceous earth and place in container for disposal according to local regulations (see Section 13). Dispose of via a licensed waste disposal contractor. Contaminated absorbent material may pose the same hazard as the spilled product. Note: see Section 1 for emergency contact information and Section 13 for waste disposal.

Section 7. Handling and storage

Precautions for safe handling

Protective measures : Put on appropriate personal protective equipment (see Section 8). Persons with a history of skin sensitization problems should not be employed in any process in which this product is used. Avoid exposure - obtain special instructions before use. Do not handle until all safety precautions have been read and understood. Do not get in eyes or on skin or clothing. Do not breathe vapor or mist. Do not ingest. Use only with adequate ventilation. Wear appropriate respirator when ventilation is inadequate. Do not enter storage areas and confined spaces unless adequately ventilated. Keep in the original container or an approved alternative made from a compatible material, kept tightly closed when not in use. Store and use away from heat, sparks, open flame or any other ignition source. Use explosion-proof electrical (ventilating, lighting and material handling) equipment. Use only non-sparking tools. Take precautionary measures against electrostatic discharges. Empty containers retain product residue and can be hazardous. Do not reuse container.

Special precautions : If this material is part of a multiple component system, read the Safety Data Sheet(s) for the other component or components before blending as the resulting mixture may have the hazards of all of its parts.

Advice on general occupational hygiene : Eating, drinking and smoking should be prohibited in areas where this material is handled, stored and processed. Workers should wash hands and face before eating, drinking and smoking. Remove contaminated clothing and protective equipment before entering eating areas. See also Section 8 for additional information on hygiene measures.

Conditions for safe storage, including any incompatibilities : Do not store below the following temperature: 5°C (41°F). Store in accordance with local regulations. Store in a segregated and approved area. Store in original container protected from direct sunlight in a dry, cool and well-ventilated area, away from incompatible materials (see Section 10) and food and drink. Store locked up. Eliminate all ignition sources. Separate from oxidizing materials. Keep container tightly closed and sealed until ready for use. Containers that have been opened must be carefully resealed and kept upright to prevent leakage. Do not store in unlabeled containers. Use appropriate containment to avoid environmental contamination.

Section 8. Exposure controls/personal protection

Control parameters

Occupational exposure limits

Ingredient name	Exposure limits
butan-1-ol	**ACGIH TLV (United States, 3/2019).** TWA: 20 ppm 8 hours. **OSHA PEL (United States, 5/2018).** TWA: 300 mg/m³ 8 hours. TWA: 100 ppm 8 hours.
acetone	**ACGIH TLV (United States, 3/2019).** STEL: 500 ppm 15 minutes. TWA: 250 ppm 8 hours. **OSHA PEL (United States, 5/2018).** TWA: 2400 mg/m³ 8 hours. TWA: 1000 ppm 8 hours.
4-chloro-α,α,α-trifluorotoluene	**IPEL (PPG).** TWA: 0.57 ppm

Section 8. Exposure controls/personal protection

	STEL: 1.71 ppm
Solvent naphtha (petroleum), heavy arom.	None.
bis-[4-(2,3-epoxipropoxi)phenyl]propane	None.
2-methylpropan-1-ol	**ACGIH TLV (United States, 3/2019).** TWA: 152 mg/m³ 8 hours. TWA: 50 ppm 8 hours. **OSHA PEL (United States, 5/2018).** TWA: 300 mg/m³ 8 hours. TWA: 100 ppm 8 hours.
zinc oxide	**OSHA PEL (United States, 5/2018).** TWA: 5 mg/m³ 8 hours. Form: Fume TWA: 5 mg/m³ 8 hours. Form: Respirable fraction TWA: 15 mg/m³ 8 hours. Form: Total dust **ACGIH TLV (United States, 3/2019).** STEL: 10 mg/m³ 15 minutes. Form: Respirable fraction TWA: 2 mg/m³ 8 hours. Form: Respirable fraction
titanium dioxide	**OSHA PEL (United States, 5/2018).** TWA: 15 mg/m³ 8 hours. Form: Total dust **ACGIH TLV (United States, 3/2019).** TWA: 10 mg/m³ 8 hours.
[3-(2,3-epoxypropoxy)propyl]trimethoxysilane	None.
2-butoxyethanol	**ACGIH TLV (United States, 3/2019).** TWA: 20 ppm 8 hours. **OSHA PEL (United States, 5/2018).** **Absorbed through skin.** TWA: 240 mg/m³ 8 hours. TWA: 50 ppm 8 hours.
3-butoxypropan-2-ol	**IPEL (PPG).** TWA: 50 ppm
xylene	**ACGIH TLV (United States, 3/2019).** STEL: 651 mg/m³ 15 minutes. STEL: 150 ppm 15 minutes. TWA: 434 mg/m³ 8 hours. TWA: 100 ppm 8 hours. **OSHA PEL (United States, 5/2018).** TWA: 435 mg/m³ 8 hours. TWA: 100 ppm 8 hours.
naphthalene	**ACGIH TLV (United States, 3/2019).** **Absorbed through skin.** TWA: 52 mg/m³ 8 hours. TWA: 10 ppm 8 hours. **OSHA PEL (United States, 5/2018).** TWA: 50 mg/m³ 8 hours. TWA: 10 ppm 8 hours.
ethylbenzene	**ACGIH TLV (United States, 3/2019).** TWA: 20 ppm 8 hours. **OSHA PEL (United States, 5/2018).** TWA: 435 mg/m³ 8 hours. TWA: 100 ppm 8 hours.

Section 8. Exposure controls/personal protection

carbon black, respirable powder	**ACGIH TLV (United States, 3/2019).** TWA: 3 mg/m³ 8 hours. Form: Inhalable fraction **OSHA PEL (United States, 5/2018).** TWA: 3.5 mg/m³ 8 hours.

Key to abbreviations

A	= Acceptable Maximum Peak	S	= Potential skin absorption
ACGIH	= American Conference of Governmental Industrial Hygienists.	SR	= Respiratory sensitization
C	= Ceiling Limit	SS	= Skin sensitization
F	= Fume	STEL	= Short term Exposure limit values
IPEL	= Internal Permissible Exposure Limit	TD	= Total dust
OSHA	= Occupational Safety and Health Administration.	TLV	= Threshold Limit Value
R	= Respirable	TWA	= Time Weighted Average
Z	= OSHA 29 CFR 1910.1200 Subpart Z - Toxic and Hazardous Substances		

Consult local authorities for acceptable exposure limits.

Recommended monitoring procedures : If this product contains ingredients with exposure limits, personal, workplace atmosphere or biological monitoring may be required to determine the effectiveness of the ventilation or other control measures and/or the necessity to use respiratory protective equipment. Reference should be made to appropriate monitoring standards. Reference to national guidance documents for methods for the determination of hazardous substances will also be required.

Appropriate engineering controls : Use only with adequate ventilation. Use process enclosures, local exhaust ventilation or other engineering controls to keep worker exposure to airborne contaminants below any recommended or statutory limits. The engineering controls also need to keep gas, vapor or dust concentrations below any lower explosive limits. Use explosion-proof ventilation equipment.

Environmental exposure controls : Emissions from ventilation or work process equipment should be checked to ensure they comply with the requirements of environmental protection legislation. In some cases, fume scrubbers, filters or engineering modifications to the process equipment will be necessary to reduce emissions to acceptable levels.

Individual protection measures

Hygiene measures : Wash hands, forearms and face thoroughly after handling chemical products, before eating, smoking and using the lavatory and at the end of the working period. Appropriate techniques should be used to remove potentially contaminated clothing. Contaminated work clothing should not be allowed out of the workplace. Wash contaminated clothing before reusing. Ensure that eyewash stations and safety showers are close to the workstation location.

Eye/face protection : Chemical splash goggles and face shield.

Skin protection

Hand protection : Chemical-resistant, impervious gloves complying with an approved standard should be worn at all times when handling chemical products if a risk assessment indicates this is necessary. Considering the parameters specified by the glove manufacturer, check during use that the gloves are still retaining their protective properties. It should be noted that the time to breakthrough for any glove material may be different for different glove manufacturers. In the case of mixtures, consisting of several substances, the protection time of the gloves cannot be accurately estimated.

Gloves : butyl rubber

Section 8. Exposure controls/personal protection

Body protection : Personal protective equipment for the body should be selected based on the task being performed and the risks involved and should be approved by a specialist before handling this product. When there is a risk of ignition from static electricity, wear anti-static protective clothing. For the greatest protection from static discharges, clothing should include anti-static overalls, boots and gloves.

Other skin protection : Appropriate footwear and any additional skin protection measures should be selected based on the task being performed and the risks involved and should be approved by a specialist before handling this product.

Respiratory protection : Respirator selection must be based on known or anticipated exposure levels, the hazards of the product and the safe working limits of the selected respirator. If workers are exposed to concentrations above the exposure limit, they must use appropriate, certified respirators. Use a properly fitted, air-purifying or air-fed respirator complying with an approved standard if a risk assessment indicates this is necessary.

Section 9. Physical and chemical properties

Appearance

Physical state : Liquid.

Color : Not available.

Odor : Not available.

Odor threshold : Not available.

pH : Not available.

Melting point : Not available.

Boiling point : >37.78°C (>100°F)

Flash point : Closed cup: -6.67°C (20°F)

Auto-ignition temperature : Not available.

Decomposition temperature : Not available.

Flammability (solid, gas) : Not available.

Lower and upper explosive (flammable) limits : Not available.

Evaporation rate : Not available.

Vapor pressure : Not available.

Vapor density : Not available.

Relative density : 1.04

Density (lbs / gal) : 8.68

Bulk Density (g/cm³) : 1.04

Solubility : Insoluble in the following materials: cold water.

Partition coefficient: n-octanol/water : Not available.

Viscosity : Kinematic (40°C (104°F)): >0.21 cm^2/s (>21 cSt)

Volatility : 81% (v/v), 68.84% (w/w)

% Solid. (w/w) : 31.16

Section 10. Stability and reactivity

Reactivity : No specific test data related to reactivity available for this product or its ingredients.

Chemical stability : The product is stable.

Possibility of hazardous reactions : Under normal conditions of storage and use, hazardous reactions will not occur.

Conditions to avoid : When exposed to high temperatures may produce hazardous decomposition products. Refer to protective measures listed in sections 7 and 8.

Incompatible materials : Keep away from the following materials to prevent strong exothermic reactions: oxidizing agents, strong alkalis, strong acids.

Hazardous decomposition products : Decomposition products may include the following materials: carbon monoxide, carbon dioxide, smoke, oxides of nitrogen.

Section 11. Toxicological information

Information on toxicological effects

Acute toxicity

Product/ingredient name	Result	Species	Dose	Exposure
butan-1-ol	LC50 Inhalation Vapor	Rat	24000 mg/m³	4 hours
	LC50 Inhalation Vapor	Rat	8000 ppm	4 hours
	LD50 Dermal	Rabbit	3400 mg/kg	-
	LD50 Oral	Rat	790 mg/kg	-
acetone	LC50 Inhalation Vapor	Rat	76000 mg/m³	4 hours
	LD50 Dermal	Rabbit	15.8 g/kg	-
	LD50 Oral	Rat	5800 mg/kg	-
4-chloro-α,α,α-trifluorotoluene	LC50 Inhalation Vapor	Rat	33080 mg/m³	4 hours
	LD50 Dermal	Rabbit	>2.7 g/kg	-
	LD50 Oral	Rat	13 g/kg	-
Solvent naphtha (petroleum), heavy arom.	LC50 Inhalation Dusts and mists	Rat	>5.2 mg/l	4 hours
	LD50 Oral	Rat	>5 g/kg	-
bis-[4-(2,3-epoxipropoxi) phenyl]propane	LD50 Dermal	Rabbit	23000 mg/kg	-
	LD50 Oral	Rat	15000 mg/kg	-
2-methylpropan-1-ol	LC50 Inhalation Vapor	Rat	24.6 mg/l	4 hours
	LD50 Dermal	Rabbit	2460 mg/kg	-
	LD50 Oral	Rat	2830 mg/kg	-
zinc oxide	LC50 Inhalation Dusts and mists	Rat	>5700 mg/m³	4 hours
	LD50 Dermal	Rat	>2000 mg/kg	-
	LD50 Oral	Rat	>5000 mg/kg	-
titanium dioxide	LC50 Inhalation Dusts and mists	Rat	>6.82 mg/l	4 hours
	LD50 Dermal	Rabbit	>5000 mg/kg	-
	LD50 Oral	Rat	>5000 mg/kg	-
[3-(2,3-epoxypropoxy)propyl] trimethoxysilane	LC50 Inhalation Dusts and mists	Rat	>5300 mg/m³	4 hours

Section 11. Toxicological information

	LD50 Dermal	Rabbit	4.3 g/kg	-
	LD50 Oral	Rat	7.01 g/kg	-
2-butoxyethanol	LD50 Dermal	Rabbit	1060 mg/kg	-
	LD50 Oral	Rat - Male	1480 mg/kg	-
3-butoxypropan-2-ol	LD50 Dermal	Rabbit	3100 mg/kg	-
	LD50 Oral	Rat	2.2 g/kg	-
xylene	LD50 Dermal	Rabbit	1.7 g/kg	-
	LD50 Oral	Rat	4.3 g/kg	-
naphthalene	LD50 Dermal	Rabbit	>20 g/kg	-
	LD50 Oral	Rat	490 mg/kg	-
ethylbenzene	LC50 Inhalation Vapor	Rat	17.8 mg/l	4 hours
	LD50 Dermal	Rabbit	17.8 g/kg	-
	LD50 Oral	Rat	3.5 g/kg	-
carbon black, respirable powder	LD50 Dermal	Rabbit	>3 g/kg	-
	LD50 Oral	Rat	>15400 mg/kg	-

Conclusion/Summary : There are no data available on the mixture itself.

Irritation/Corrosion

Product/ingredient name	Result	Species	Score	Exposure	Observation
bis-[4-(2,3-epoxipropoxi) phenyl]propane	Eyes - Redness of the conjunctivae	Rabbit	0.4	24 hours	-
	Eyes - Mild irritant	Rabbit	-	24 hours	-
	Skin - Erythema/Eschar	Rabbit	0.8	4 hours	-
	Skin - Edema	Rabbit	0.5	4 hours	-
	Skin - Mild irritant	Rabbit	-	4 hours	-
[3-(2,3-epoxypropoxy)propyl] trimethoxysilane	Eyes - Cornea opacity	Rabbit	11.8	1 minutes	24 hours
2-butoxyethanol	Skin - Moderate irritant	Rabbit	-	4 hours	28 days
	Eyes - Irritant	Rabbit	-	24 hours	21 days
xylene	Skin - Moderate irritant	Rabbit	-	24 hours 500 mg	-

Conclusion/Summary

Skin : There are no data available on the mixture itself.

Eyes : There are no data available on the mixture itself.

Respiratory : There are no data available on the mixture itself.

Sensitization

Product/ingredient name	Route of exposure	Species	Result
bis-[4-(2,3-epoxipropoxi) phenyl]propane	skin	Mouse	Sensitizing

Conclusion/Summary

Skin : There are no data available on the mixture itself.

Respiratory : There are no data available on the mixture itself.

Mutagenicity

Conclusion/Summary : There are no data available on the mixture itself.

Carcinogenicity

Section 11. Toxicological information

Conclusion/Summary : There are no data available on the mixture itself.

Classification

Product/ingredient name	OSHA	IARC	NTP
4-chloro-α,α,α-trifluorotoluene	-	2B	-
bis-[4-(2,3-epoxipropoxi) phenyl]propane	-	3	-
titanium dioxide	-	2B	-
2-butoxyethanol	-	3	-
xylene	-	3	-
naphthalene	-	2B	Reasonably anticipated to be a human carcinogen.
ethylbenzene	-	2B	-
carbon black, respirable powder	-	2B	-

Carcinogen Classification code:

IARC: 1, 2A, 2B, 3, 4
NTP: Known to be a human carcinogen; Reasonably anticipated to be a human carcinogen
OSHA: +
Not listed/not regulated: -

Reproductive toxicity

Conclusion/Summary : There are no data available on the mixture itself.

Teratogenicity

Conclusion/Summary : There are no data available on the mixture itself.

Specific target organ toxicity (single exposure)

Name	Category	Route of exposure	Target organs
butan-1-ol	Category 3	-	Respiratory tract irritation
	Category 3		Narcotic effects
acetone	Category 3	-	Narcotic effects
4-chloro-α,α,α-trifluorotoluene	Category 3	-	Respiratory tract irritation
Solvent naphtha (petroleum), heavy arom.	Category 3	-	Narcotic effects
2-methylpropan-1-ol	Category 3	-	Respiratory tract irritation
	Category 3		Narcotic effects
xylene	Category 3	-	Respiratory tract irritation

Specific target organ toxicity (repeated exposure)

Name	Category	Route of exposure	Target organs
naphthalene	Category 2	-	-
ethylbenzene	Category 2	-	hearing organs

Section 11. Toxicological information

Target organs : Contains material which causes damage to the following organs: brain, skin, central nervous system (CNS).
Contains material which may cause damage to the following organs: blood, kidneys, lungs, the nervous system, liver, spleen, lymphatic system, gastrointestinal tract, upper respiratory tract, adrenal, bone marrow, ears, eye, lens or cornea.

Aspiration hazard

Name	Result
Solvent naphtha (petroleum), heavy arom.	ASPIRATION HAZARD - Category 1
xylene	ASPIRATION HAZARD - Category 1
ethylbenzene	ASPIRATION HAZARD - Category 1

Information on the likely routes of exposure

Potential acute health effects

Eye contact : Causes serious eye damage.
Inhalation : Can cause central nervous system (CNS) depression. May cause drowsiness or dizziness. May cause respiratory irritation.
Skin contact : Causes skin irritation. Defatting to the skin. May cause an allergic skin reaction.
Ingestion : Can cause central nervous system (CNS) depression.

Over-exposure signs/symptoms

Eye contact : Adverse symptoms may include the following:
pain
watering
redness

Inhalation : Adverse symptoms may include the following:
respiratory tract irritation
coughing
nausea or vomiting
headache
drowsiness/fatigue
dizziness/vertigo
unconsciousness

Skin contact : Adverse symptoms may include the following:
pain or irritation
redness
dryness
cracking
blistering may occur

Ingestion : Adverse symptoms may include the following:
stomach pains

Delayed and immediate effects and also chronic effects from short and long term exposure

Conclusion/Summary : There are no data available on the mixture itself. Trimethoxysilanes are capable of forming methanol if hydrolyzed or ingested. If swallowed, methanol may be harmful or fatal or cause blindness. This product contains TiO2 which has been classified as a GHS Carcinogen Category 2 based on its IARC 2B classification. For many PPG products, TiO2 is utilized as a raw material in a liquid coating formulation. In this case, the TiO2 particles are bound in a matrix with no meaningful potential for human exposure to unbound particles of TiO2 when the product is applied with a brush or roller. Sanding the coating surface or mist from spray applications may be harmful depending on the duration and level of exposure and require the use of appropriate personal

Section 11. Toxicological information

protective equipment and/or engineering controls (see Section 8). Exposure to component solvent vapor concentrations in excess of the stated occupational exposure limit may result in adverse health effects such as mucous membrane and respiratory system irritation and adverse effects on the kidneys, liver and central nervous system. Symptoms and signs include headache, dizziness, fatigue, muscular weakness, drowsiness and, in extreme cases, loss of consciousness. Solvents may cause some of the above effects by absorption through the skin. There is some evidence that repeated exposure to organic solvent vapors in combination with constant loud noise can cause greater hearing loss than expected from exposure to noise alone. If splashed in the eyes, the liquid may cause irritation and reversible damage. Ingestion may cause nausea, diarrhea and vomiting. This takes into account, where known, delayed and immediate effects and also chronic effects of components from short-term and long-term exposure by oral, inhalation and dermal routes of exposure and eye contact.

Short term exposure

Potential immediate effects : There are no data available on the mixture itself.

Potential delayed effects : There are no data available on the mixture itself.

Long term exposure

Potential immediate effects : There are no data available on the mixture itself.

Potential delayed effects : There are no data available on the mixture itself.

Potential chronic health effects

General : Prolonged or repeated contact can defat the skin and lead to irritation, cracking and/or dermatitis. Once sensitized, a severe allergic reaction may occur when subsequently exposed to very low levels.

Carcinogenicity : May cause cancer. Risk of cancer depends on duration and level of exposure.

Mutagenicity : No known significant effects or critical hazards.

Reproductive toxicity : No known significant effects or critical hazards.

Numerical measures of toxicity

Acute toxicity estimates

Product/ingredient name	Oral (mg/kg)	Dermal (mg/kg)	Inhalation (gases) (ppm)	Inhalation (vapors) (mg/l)	Inhalation (dusts and mists) (mg/l)
ECOBASE™ 5.5 Etch Prime	3303.4	4230.2	N/A	284.6	38.8
butan-1-ol	790	3400	N/A	24	N/A
acetone	5800	15800	N/A	76	N/A
4-chloro-α,α,α-trifluorotoluene	13000	2500	N/A	33.08	N/A
bis-[4-(2,3-epoxipropoxi)phenyl]propane	15000	23000	N/A	N/A	N/A
2-methylpropan-1-ol	2830	2460	N/A	24.6	N/A
zinc oxide	N/A	2500	N/A	N/A	N/A
[3-(2,3-epoxypropoxy)propyl]trimethoxysilane	7010	4300	N/A	N/A	N/A
2-butoxyethanol	1480	1060	N/A	11	1.5
3-butoxypropan-2-ol	2200	3100	N/A	N/A	N/A
xylene	4300	1700	N/A	11	1.5
naphthalene	490	N/A	N/A	N/A	N/A
ethylbenzene	3500	17800	N/A	17.8	1.5

Section 11. Toxicological information

carbon black, respirable powder	N/A	2500	N/A	N/A	N/A

Section 12. Ecological information

Toxicity

Product/ingredient name	Result	Species	Exposure
butan-1-ol	Acute LC50 1376 mg/l	Fish	96 hours
acetone	Acute LC50 4.42589 ml/L Marine water	Crustaceans - Acartia tonsa - Copepodid	48 hours
	Acute LC50 5540 mg/l	Fish	96 hours
Solvent naphtha (petroleum), heavy arom.	NOEL 0.48 mg/l Fresh water	Daphnia	21 days
bis-[4-(2,3-epoxipropoxi) phenyl]propane	Acute LC50 1.8 mg/l Fresh water	Daphnia - daphnia magna	48 hours
	Chronic NOEC 0.3 mg/l	Daphnia	21 days
2-methylpropan-1-ol	Acute EC50 1100 mg/l	Daphnia	48 hours
zinc oxide	Acute EC50 0.17 mg/l	Algae	72 hours
	Acute EC50 0.481 mg/l Fresh water	Daphnia - Daphnia magna - Neonate	48 hours
	Chronic NOEC 0.017 mg/l Fresh water	Algae	72 hours
titanium dioxide	Acute LC50 >100 mg/l Fresh water	Daphnia - Daphnia magna	48 hours
[3-(2,3-epoxypropoxy)propyl] trimethoxysilane	Acute LC50 324 mg/l	Daphnia	48 hours
2-butoxyethanol	Acute LC50 1474 mg/l	Fish	96 hours
	Chronic NOEC >100 mg/l	Fish	21 days
ethylbenzene	Acute LC50 150 to 200 mg/l Fresh water	Fish	96 hours

Persistence and degradability

Product/ingredient name	Test	Result	Dose	Inoculum
acetone	-	90.9 % - Readily - 28 days	-	-

Product/ingredient name	Aquatic half-life	Photolysis	Biodegradability
acetone	-	-	Readily
bis-[4-(2,3-epoxipropoxi) phenyl]propane	-	-	Not readily
2-butoxyethanol	-	-	Readily
xylene	-	-	Readily
ethylbenzene	-	-	Readily

Bioaccumulative potential

Section 12. Ecological information

Product/ingredient name	$LogP_{ow}$	BCF	Potential
butan-1-ol	0.88	-	low
acetone	-0.24	3	low
2-methylpropan-1-ol	0.76	-	low
2-butoxyethanol	0.81	-	low
3-butoxypropan-2-ol	1.15	-	low
xylene	3.16	7.4 to 18.5	low
naphthalene	3.3	85.11	low
ethylbenzene	3.15	79.43	low

Mobility in soil

Soil/water partition coefficient (K_{oc}) : Not available.

Section 13. Disposal considerations

Disposal methods : The generation of waste should be avoided or minimized wherever possible. Disposal of this product, solutions and any by-products should at all times comply with the requirements of environmental protection and waste disposal legislation and any regional local authority requirements. Dispose of surplus and non-recyclable products via a licensed waste disposal contractor. Waste should not be disposed of untreated to the sewer unless fully compliant with the requirements of all authorities with jurisdiction. Waste packaging should be recycled. Incineration or landfill should only be considered when recycling is not feasible. This material and its container must be disposed of in a safe way. Care should be taken when handling emptied containers that have not been cleaned or rinsed out. Empty containers or liners may retain some product residues. Vapor from product residues may create a highly flammable or explosive atmosphere inside the container. Do not cut, weld or grind used containers unless they have been cleaned thoroughly internally. Avoid dispersal of spilled material and runoff and contact with soil, waterways, drains and sewers.

Disposal should be in accordance with applicable regional, national and local laws and regulations.

Refer to Section 7: HANDLING AND STORAGE and Section 8: EXPOSURE CONTROLS/PERSONAL PROTECTION for additional handling information and protection of employees. Section 6. Accidental release measures

14. Transport information

	DOT	IMDG	IATA
UN number	UN1263	UN1263	UN1263
UN proper shipping name	PAINT	PAINT	PAINT
Transport hazard class (es)	3	3	3
Packing group	II	II	II
Environmental hazards	No.	Yes.	Yes. The environmentally hazardous substance mark is not required.

14. Transport information

Marine pollutant substances	Not applicable.	(Solvent naphtha (petroleum), heavy aromatic, bis-[4-(2,3-epoxipropoxi)phenyl] propane)	Not applicable.
Product RQ (lbs)	7302.6	Not applicable.	Not applicable.
RQ substances	(xylene, naphthalene)	Not applicable.	Not applicable.

Additional information

DOT : Package sizes shipped in quantities less than the product reportable quantity are not subject to the RQ (reportable quantity) transportation requirements.

IMDG : The marine pollutant mark is not required when transported in sizes of ≤5 L or ≤5 kg.

IATA : The environmentally hazardous substance mark may appear if required by other transportation regulations.

Special precautions for user : **Transport within user's premises:** always transport in closed containers that are upright and secure. Ensure that persons transporting the product know what to do in the event of an accident or spillage.

Transport in bulk according to IMO instruments : Not applicable.

Section 15. Regulatory information

United States

United States inventory (TSCA 8b) : All components are active or exempted.

U.S. Federal regulations :

United States - TSCA 12(b) - Chemical export notification:

4-chloro-α,α,α-trifluorotoluene — One time notification

United States - TSCA 5(a)2 - Final significant new use rules:

4-chloro-α,α,α-trifluorotoluene — Listed — 40 CFR 799.5089

SARA 302/304

SARA 304 RQ : Not applicable.

Composition/information on ingredients

No products were found.

SARA 311/312

Classification : FLAMMABLE LIQUIDS - Category 2
SKIN IRRITATION - Category 2
SERIOUS EYE DAMAGE - Category 1
SKIN SENSITIZATION - Category 1
CARCINOGENICITY - Category 1B
SPECIFIC TARGET ORGAN TOXICITY (SINGLE EXPOSURE) (Respiratory tract irritation) - Category 3
SPECIFIC TARGET ORGAN TOXICITY (SINGLE EXPOSURE) (Narcotic effects) - Category 3
HNOC - Defatting irritant

Composition/information on ingredients

Section 15. Regulatory information

Name	%	Classification
butan-1-ol	≥20 - ≤33	FLAMMABLE LIQUIDS - Category 3 ACUTE TOXICITY (oral) - Category 4 SKIN IRRITATION - Category 2 SERIOUS EYE DAMAGE - Category 1 SPECIFIC TARGET ORGAN TOXICITY (SINGLE EXPOSURE) (Respiratory tract irritation) - Category 3 SPECIFIC TARGET ORGAN TOXICITY (SINGLE EXPOSURE) (Narcotic effects) - Category 3 HNOC - Defatting irritant
acetone	≥10 - ≤20	FLAMMABLE LIQUIDS - Category 2 EYE IRRITATION - Category 2A SPECIFIC TARGET ORGAN TOXICITY (SINGLE EXPOSURE) (Narcotic effects) - Category 3 HNOC - Defatting irritant
4-chloro-α,α,α-trifluorotoluene	≥10 - ≤20	FLAMMABLE LIQUIDS - Category 3 SKIN IRRITATION - Category 2 EYE IRRITATION - Category 2A CARCINOGENICITY - Category 2 SPECIFIC TARGET ORGAN TOXICITY (SINGLE EXPOSURE) (Respiratory tract irritation) - Category 3 HNOC - Defatting irritant
Solvent naphtha (petroleum), heavy arom.	≥5.0 - ≤10	FLAMMABLE LIQUIDS - Category 4 SPECIFIC TARGET ORGAN TOXICITY (SINGLE EXPOSURE) (Narcotic effects) - Category 3 ASPIRATION HAZARD - Category 1 HNOC - Defatting irritant
bis-[4-(2,3-epoxipropoxi)phenyl] propane	≥5.0 - ≤10	SKIN IRRITATION - Category 2 EYE IRRITATION - Category 2A SKIN SENSITIZATION - Category 1B
2-methylpropan-1-ol	≥5.0 - ≤10	FLAMMABLE LIQUIDS - Category 3 SKIN IRRITATION - Category 2 SERIOUS EYE DAMAGE - Category 1 SPECIFIC TARGET ORGAN TOXICITY (SINGLE EXPOSURE) (Respiratory tract irritation) - Category 3 SPECIFIC TARGET ORGAN TOXICITY (SINGLE EXPOSURE) (Narcotic effects) - Category 3 HNOC - Defatting irritant
titanium dioxide	≥1.0 - ≤5.0	CARCINOGENICITY - Category 2
[3-(2,3-epoxypropoxy)propyl] trimethoxysilane	≥1.0 - ≤5.0	SERIOUS EYE DAMAGE - Category 1
2-butoxyethanol	≥1.0 - ≤3.0	FLAMMABLE LIQUIDS - Category 4 ACUTE TOXICITY (oral) - Category 4 ACUTE TOXICITY (dermal) - Category 4 ACUTE TOXICITY (inhalation) - Category 4 SKIN IRRITATION - Category 2 EYE IRRITATION - Category 2A
3-butoxypropan-2-ol	≥0.10 - ≤2.3	FLAMMABLE LIQUIDS - Category 4 SKIN IRRITATION - Category 2 EYE IRRITATION - Category 2A
xylene	≥0.10 - ≤2.2	FLAMMABLE LIQUIDS - Category 3 ACUTE TOXICITY (dermal) - Category 4

Section 15. Regulatory information

naphthalene	<1.0	ACUTE TOXICITY (inhalation) - Category 4 SKIN IRRITATION - Category 2 EYE IRRITATION - Category 2A SPECIFIC TARGET ORGAN TOXICITY (SINGLE EXPOSURE) (Respiratory tract irritation) - Category 3 ASPIRATION HAZARD - Category 1 FLAMMABLE SOLIDS - Category 2 ACUTE TOXICITY (oral) - Category 4 CARCINOGENICITY - Category 1B SPECIFIC TARGET ORGAN TOXICITY (REPEATED EXPOSURE) - Category 2
ethylbenzene	<1.0	FLAMMABLE LIQUIDS - Category 2 ACUTE TOXICITY (inhalation) - Category 4 CARCINOGENICITY - Category 2 SPECIFIC TARGET ORGAN TOXICITY (REPEATED EXPOSURE) - Category 2 ASPIRATION HAZARD - Category 1
carbon black, respirable powder	<1.0	HNOC - Defatting irritant COMBUSTIBLE DUSTS CARCINOGENICITY - Category 2

SARA 313

Supplier notification :

Chemical name	CAS number	Concentration
butan-1-ol	71-36-3	10 - 30
trizinc bis(orthophosphate)	7779-90-0	3 - 7
zinc oxide	1314-13-2	1 - 5
2-butoxyethanol	111-76-2	1 - 5
xylene	1330-20-7	0.5 - 1.5
naphthalene	91-20-3	0.1 - 1
ethylbenzene	100-41-4	0.1 - 1

SARA 313 notifications must not be detached from the SDS and any copying and redistribution of the SDS shall include copying and redistribution of the notice attached to copies of the SDS subsequently redistributed.

Additional environmental information is contained on the Environmental Data Sheet for this product, which can be obtained from your PPG representative.

California Prop. 65

⚠ **WARNING**: Cancer and Reproductive Harm - www.P65Warnings.ca.gov.

Section 16. Other information

Hazardous Material Information System (U.S.A.)

Health : 3 * **Flammability** : 3 **Physical hazards** : 0

(*) - Chronic effects

Caution: HMIS® ratings are based on a 0-4 rating scale, with 0 representing minimal hazards or risks, and 4 representing significant hazards or risks. Although HMIS® ratings and the associated label are not required on MSDSs or products leaving a facility under 29 CFR 1910.1200, the preparer may choose to provide them. HMIS® ratings are to be used with a fully implemented HMIS® program. HMIS® is a registered trademark and service mark of the American Coatings Association, Inc.

The customer is responsible for determining the PPE code for this material. For more information on HMIS® Personal Protective Equipment (PPE) codes, consult the HMIS® Implementation Manual.

National Fire Protection Association (U.S.A.)

Section 16. Other information

Health : 3 **Flammability** : 3 **Instability** : 0

Date of previous issue : **8/2/2020**

Organization that prepared the MSDS : EHS

Key to abbreviations : ATE = Acute Toxicity Estimate
BCF = Bioconcentration Factor
GHS = Globally Harmonized System of Classification and Labelling of Chemicals
IATA = International Air Transport Association
IBC = Intermediate Bulk Container
IMDG = International Maritime Dangerous Goods
LogPow = logarithm of the octanol/water partition coefficient
MARPOL = International Convention for the Prevention of Pollution From Ships, 1973 as modified by the Protocol of 1978. ("Marpol" = marine pollution)
N/A = Not available
SGG = Segregation Group
UN = United Nations

◤ **Indicates information that has changed from previously issued version.**

Disclaimer

The information contained in this data sheet is based on present scientific and technical knowledge. The purpose of this information is to draw attention to the health and safety aspects concerning the products supplied by PPG, and to recommend precautionary measures for the storage and handling of the products. No warranty or guarantee is given in respect of the properties of the products. No liability can be accepted for any failure to observe the precautionary measures described in this data sheet or for any misuse of the products.

OneChoice
A Universal Ancillary Brand

OC-35

1K Compliant Adhesion Promoter

SU470LV / SUA470LV

ONECHOICE® SU470LV / SUA470LV is a 1K adhesion promoter for use within all North American markets and is recommended for use under PPG and NEXA AUTOCOLOR® branded undercoats and topcoats.

After proper cleaning and used as recommended, SU470LV / SUA470LV will deliver exceptional adhesion to bare, unprimed automotive bumpers, fascias, and other automotive plastics.

Features & Benefits

- Convenient ready to use packaging
- Produces consistent results
- Used with PPG and *Nexa Autocolor* branded undercoats and topcoats.
- Can be used in all North American markets
- Provides excellent topcoat adhesion and hold-out
- Customer Satisfaction
- Versatility and reliability
- Improved productivity
- Available in an aerosol

Compatible Products

- DELTRON® 2000 (DBC) Basecoat
- ENVIROBASE® High Performance Waterborne Basecoat*
- GLOBAL REFINISH SYSTEM™ (BC) Basecoat Color
- AQUABASE® Plus Waterborne Basecoat*
- CONCEPT® (DCC) Acrylic Urethane
- *Nexa Autocolor* 2K® P420/P421/P422
- *Deltron* Undercoats
- *Global Refinish System* Undercoats
- *Envirobase* High Performance Undercoats
- *Aquabase* Plus Undercoats
- *Nexa Autocolor 2K* Undercoats

*Adhesion promoter must be sealed before top coating with waterborne basecoat.

Note: For complete system repair guidelines, please refer to the product's specific technical bulletin for additional components and information.

PPG

Directions for Use

Surface Preparation:

- Thoroughly clean and scuff the area to be painted with the *OneChoice* SU4901 Clean and Scuff Sponge or SX1002 Sanding Paste and a gray scuff pad, rinse with clean water. **Note: Water should sheet (run-off) from the surface. If water beads up, repeat the cleaning process before proceeding.**
- Blow or wipe dry with a clean cloth and ensure that the entire surface has been totally de-glossed.
- Final clean with SWX350 H_2O-SO-CLEAN®, SX103/SXA103 MULTI-PREP™, or SX394 1.4 Low VOC Cleaner*. Be sure the surface is thoroughly dry before proceeding and use a tack cloth to eliminate dirt prior to applying SU470LV / SUA470LV
- To ensure maximum adhesion after cleaning, SU470LV / SUA470LV 1K Compliant Adhesion Promoter should be applied immediately following the cleaning process. After cleaning, if the part should sit for more than 1 hour, it must be re-cleaned before the application of SU470LV / SUA470LV 1K Compliant Adhesion Promoter.

**Confirm cleaners are compliant with local regulations before use*

Mix Ratio:

SU470LV / SUA470LV is packaged ready-to spray
Pot Life: Indefinite

- Hand shake SU470LV well before each use.
- SU470LV may be left in the spray gun for up to 8 hours.
- When using SUA470LV vigorously hand shake spray can for one minute to ensure uniformity and to prevent clogging.

Spray Gun Set-up:

Fluid tip:	1.3 - 1.5 mm or equivalent
HVLP:	10 PSI at the cap
Compliant:	29 - 40 PSI at the gun

Note: For best overall results, refer to spray gun manufacturer's recommendations for the inlet air pressures.

Application:

Apply: 1 medium wet coat

Note: The pigmentation in this products is solely intended to visually aid you in applying the product. If you have sprayed this product to hiding, you've exceeded the maximum film build of the product, which will negatively affect cure.

Drying Times:

Before top coating: 10 minutes at 70°F (21°C)*

*If longer than 1 hour, lightly sand, re-clean and re-apply SU470LV / SUA470LV.

Note: SU470LV / SUA470LV may be directly top coated with solventborne topcoats however sealing or priming prior to top coating will improve the systems overall performance and should be applied as soon as SU470LV / SUA470LV is dry to avoid contamination of the plastic part.

Do Not directly topcoat with *Envirobase* High Performance or *Aquabase* Plus waterborne basecoats. The part must first be sealed with a 2 component sealer prior to color applications.

Equipment Cleaning:

Spray guns, gun cups, storage pots etc. should be cleaned thoroughly after each use with a compliant cleaning solvent.

Note: When finished spraying aerosol products, hold can upside down and spray until valve is cleared. This will prevent clogging of the internal valve.

New Panels

Pre-Primed Plastic Substrates

Wash with soap and water

Test primer with **SXA103***

No affect

Hand sand or DA with 400 grit entire surface must be totally sanded.

Apply **SXA103** as final wipe and anti-static agent

Apply **SU470LV / SUA470LV** (Aerosol) over any cut through

Softens

Remove all primer from substrate

Follow instructions for **UnPrimed Plastic Substrates**

UnPrimed Plastic Substrates

Use **SU4901 Clean and Scuff Pad** or **SX1002 Sanding Paste** and a gray scuff pad. Rinse thoroughly with clean water. Prep is complete when water sheets (runs off). If water beads on surface, repeat process.

Blow dry or wipe with a clean cloth, entire surface must be totally de-glossed

Apply **SXA103** or **SWX350** as final wipe and anti-static agent

Apply **SU470LV / SUA470LV** (aerosol) in 1 medium wet coat over entire surface. Allow to dry 10 minutes before continuing.

Continue with the repair using your preferred PPG or *Nexa Autocolor* paint system undercoats and topcoats. Please refer to the product data sheet of the product that will be applied next for further information on how to best properly complete your repair

* Test the primer; Moisten a clean white cloth with SX103 or SXA103 *Multi-Prep* and rub an inconspicuous spot on the plastic. If the primer is softened or wipes off, remove all of the primer from the plastic part by sanding, then follow the bare plastic preparation process.

Existing Plastic Panels

Complete any minor or major plastic repair

De-gloss entire surface with 400 grit

Use **SU4901 Clean and Scuff Pad** or **SX1002 Sanding Paste** and a gray scuff pad over exposed raw plastic.
Rinse thoroughly with clean water. Prep is complete when water sheets (runs off).
If water beads on surface, repeat process.

Blow dry or wipe with a clean cloth, entire raw plastic surface must be totally de-glossed

Apply **SXA103** or **SWX350** as final wipe and anti-static agent

Apply **SU470LV / SUA470LV** (aerosol) in 1 medium wet coat over all exposed raw plastic.
Allow to dry 10 minutes before continuing.

Continue with the repair using your preferred PPG or *Nexa Autocolor* paint system undercoats and topcoats. Please refer to the product data sheet of the product that will be applied next for further information on how to best properly complete your repair

Technical Data

Properties:

RTS Combinations:	SU470LV	SUA470LV
Volume Ratio	As is	As is
Applicable Use Category	Adhesion Promoter	Adhesion Promoter (Aerosol)
VOC Actual (g/L)	85 g/L	379 g/L
VOC Actual (lbs/gal)	0.71 lbs/gal	3.17 lbs/gal
VOC Regulatory (less water less exempt) (g/L)	509 g/L	645 g/L
VOC Regulatory (less water less exempt) (lbs/gal)	4.25 lbs/gal	5.38 lbs/gal
Density (g/L)	1269 g/L	868 g/L
Density (lbs/gal)	10.59 lbs/gal	8.05 lbs/gal
Volatiles wt. %	94.6	96.5
Water wt. %	0	0
Exempt wt. %	87.9	57.1
Water vol. %	0	0
Exempt vol. %	83.3	41.1
Solids by weight (RTS)	5.4	3.5
Solids by volume (RTS)	7.0	3.5
Sq. Ft. Coverage / US Gal., 0.5 mil at 100% transfer efficiency	225	110

Important: Before opening the packages, be sure you understand the warning messages on the labels of all components, since the mixture will have the hazards of all its parts. Improper spray technique may result in a hazardous condition. Follow spray equipment manufacturer's instructions to prevent personal injury or fire. Follow directions for respirator use. Wear eye and skin protection. Observe all applicable precautions.

See Safety Data Sheet and Labels for additional safety information and handling instructions.

EMERGENCY MEDICAL OR SPILL CONTROL INFORMATION (412) 434-4515; IN CANADA (514) 645-1320

Materials described are designed for application by professional, trained personnel using proper equipment and are not intended for sale to the public. Products mentioned may be hazardous and should only be used according to directions, while observing precautions and warning statements listed on label. Statements and methods described are based upon the best information and practices known to PPG Industries. Procedures for applications mentioned are suggestions only and are not to be construed as representations or warranties as to performance, results, or fitness for any intended use, nor does PPG Industries warrant freedom from patent infringement in the use of any formula or process set forth herein.

We protect and beautify the world™

PPG
19699 Progress Drive
Strongsville, OH 44149

PPG Canada Inc.
2301 Royal Windsor Drive Unit #6
Mississauga, Ontario Canada L5J 1K5

© 2018 PPG Industries, Inc. All rights reserved
Aquabase, Concept, Deltron, Envirobase, Global Refinish System, H_2O-So-Clean, Nexa Autocolor, OneChoice and the PPG Logo are registered trademarks and *We protect and beatify the world* and *Multi-Prep* are a trademarks of PPG Industries Ohio, Inc.

SAFETY DATA SHEET

The information in this Safety Data Sheet is required pursuant to Hazardous Product Regulations 2015.

Date of issue/Date of revision **7 January 2021**
Version 8.03

Section 1. Identification

Product name	: 1K COMPLIANT ADHESION PROMOTER
Product code	: SU470LV
Other means of identification	: Not available.
Product type	: Liquid.

Relevant identified uses of the substance or mixture and uses advised against

Product use	: Industrial applications.
Use of the substance/ mixture	: Coating. Paints. Painting-related materials.
Uses advised against	: Not applicable.

Supplier	: PPG Canada Inc. 2301 Royal Windsor Drive Mississauga, ON L5J 1K5 Canada +1 888-310-4762 PPG Industries, Inc. One PPG Place, Pittsburgh, PA 15272
Emergency telephone number	: (412) 434-4515 (U.S.) (514) 645-1320 (Canada) SETIQ Interior de la República: 800-00-214-00 (México) SETIQ Ciudad de México: (55) 5559-1588 (México)
Technical Phone Number	: 1-800-647-6050

Section 2. Hazard identification

Classification of the substance or mixture	: FLAMMABLE LIQUIDS - Category 2 SKIN IRRITATION - Category 2 EYE IRRITATION - Category 2A CARCINOGENICITY - Category 2 TOXIC TO REPRODUCTION - Category 2 SPECIFIC TARGET ORGAN TOXICITY (SINGLE EXPOSURE) (Respiratory tract irritation) - Category 3 Health Hazards Not Otherwise Classified - Category 1

GHS label elements

Section 2. Hazard identification

Hazard pictograms :

Signal word : Danger

Hazard statements : Highly flammable liquid and vapor.
Causes skin irritation.
Causes serious eye irritation.
May cause respiratory irritation.
Suspected of causing cancer.
Suspected of damaging fertility or the unborn child.
Prolonged or repeated contact may dry skin and cause irritation.

Precautionary statements

Prevention : Obtain special instructions before use. Do not handle until all safety precautions have been read and understood. Wear protective gloves, protective clothing and eye or face protection. Keep away from heat, hot surfaces, sparks, open flames and other ignition sources. No smoking. Use only outdoors or in a well-ventilated area. Avoid breathing vapor. Wash thoroughly after handling.

Response : IF exposed or concerned: Get medical advice or attention. IF INHALED: Remove person to fresh air and keep comfortable for breathing. Call a POISON CENTER or doctor if you feel unwell. IF ON SKIN (or hair): Take off immediately all contaminated clothing. Rinse skin with water. IF ON SKIN: Wash with plenty of water. If skin irritation occurs: Get medical advice or attention. IF IN EYES: Rinse cautiously with water for several minutes. Remove contact lenses, if present and easy to do. Continue rinsing. If eye irritation persists: Get medical advice or attention.

Storage : Store locked up. Store in a well-ventilated place. Keep container tightly closed.

Disposal : Dispose of contents and container in accordance with all local, regional, national and international regulations.

Supplemental label elements : Repeated exposure to high vapor concentrations may cause irritation of the respiratory system and permanent brain and nervous system damage. Inhalation of vapor/aerosol concentrations above the recommended exposure limits causes headaches, drowsiness and nausea and may lead to unconsciousness or death. Avoid contact with skin and clothing. Wash thoroughly after handling. Emits toxic fumes when heated.
Percentage of the mixture consisting of ingredient(s) of unknown acute toxicity: 5% (oral), 6.7% (dermal), 8.3% (inhalation)

Section 3. Composition/information on ingredients

Substance/mixture : Mixture

Product name : 1K COMPLIANT ADHESION PROMOTER

Other means of identification : Not available.

CAS number/other identifiers

Ingredient name	Synonyms	% (w/w)	CAS number
4-chloro-α,α,α-trifluorotoluene	Not available.	80 - 100*	98-56-6
Solvent naphtha (petroleum), light aromatic	Not available.	1 - 5*	64742-95-6
1,2,4-trimethylbenzene	Not available.	1 - 5*	95-63-6
toluene	Not available.	0.1 - 1*	108-88-3

Section 3. Composition/information on ingredients

*Ranges if listed above for hazardous ingredient(s) are prescribed ranges. The actual concentration(s) or actual concentration range(s) are being withheld as a trade secret.

SUB codes represent substances without registered CAS Numbers.

There are no additional ingredients present which, within the current knowledge of the supplier and in the concentrations applicable, are classified as hazardous to health or the environment and hence require reporting in this section.

Occupational exposure limits, if available, are listed in Section 8.

Section 4. First-aid measures

If ingestion, irritation, any type of overexposure or symptoms of overexposure occur during or persists after use of this product, contact a POISON CONTROL CENTER, EMERGENCY ROOM OR PHYSICIAN immediately; have Safety Data Sheet information available. Never give anything by mouth to an unconscious or convulsing person.

Description of necessary first aid measures

Eye contact : Remove contact lenses, irrigate copiously with clean, fresh water, holding the eyelids apart for at least 10 minutes and seek immediate medical advice.

Inhalation : Remove to fresh air. Keep person warm and at rest. If not breathing, if breathing is irregular or if respiratory arrest occurs, provide artificial respiration or oxygen by trained personnel.

Skin contact : Remove contaminated clothing and shoes. Wash skin thoroughly with soap and water or use recognized skin cleanser. Do NOT use solvents or thinners.

Ingestion : If swallowed, seek medical advice immediately and show this container or label. Keep person warm and at rest. Do NOT induce vomiting.

Most important symptoms/effects, acute and delayed

Potential acute health effects

Eye contact : Causes serious eye irritation.

Inhalation : May cause respiratory irritation.

Skin contact : Causes skin irritation. Defatting to the skin.

Ingestion : No known significant effects or critical hazards.

Over-exposure signs/symptoms

Eye contact : Adverse symptoms may include the following:
pain or irritation
watering
redness

Inhalation : Adverse symptoms may include the following:
respiratory tract irritation
coughing
reduced fetal weight
increase in fetal deaths
skeletal malformations

Skin contact : Adverse symptoms may include the following:
irritation
redness
dryness
cracking
reduced fetal weight
increase in fetal deaths
skeletal malformations

Section 4. First-aid measures

Ingestion : Adverse symptoms may include the following:
reduced fetal weight
increase in fetal deaths
skeletal malformations

Indication of immediate medical attention and special treatment needed, if necessary

Notes to physician : In case of inhalation of decomposition products in a fire, symptoms may be delayed. The exposed person may need to be kept under medical surveillance for 48 hours.

Specific treatments : No specific treatment.

Protection of first-aiders : No action shall be taken involving any personal risk or without suitable training. If it is suspected that fumes are still present, the rescuer should wear an appropriate mask or self-contained breathing apparatus. It may be dangerous to the person providing aid to give mouth-to-mouth resuscitation.

See toxicological information (Section 11)

Section 5. Fire-fighting measures

Extinguishing media

Suitable extinguishing media : Use dry chemical, CO_2, water spray (fog) or foam.

Unsuitable extinguishing media : Do not use water jet.

Specific hazards arising from the chemical : Highly flammable liquid and vapor. Runoff to sewer may create fire or explosion hazard. In a fire or if heated, a pressure increase will occur and the container may burst, with the risk of a subsequent explosion.

Hazardous thermal decomposition products : Decomposition products may include the following materials:
carbon oxides
halogenated compounds
carbonyl halides

Special protective actions for fire-fighters : Promptly isolate the scene by removing all persons from the vicinity of the incident if there is a fire. No action shall be taken involving any personal risk or without suitable training. Move containers from fire area if this can be done without risk. Use water spray to keep fire-exposed containers cool.

Special protective equipment for fire-fighters : Fire-fighters should wear appropriate protective equipment and self-contained breathing apparatus (SCBA) with a full face-piece operated in positive pressure mode.

Section 6. Accidental release measures

Personal precautions, protective equipment and emergency procedures

For non-emergency personnel : No action shall be taken involving any personal risk or without suitable training. Evacuate surrounding areas. Keep unnecessary and unprotected personnel from entering. Do not touch or walk through spilled material. Shut off all ignition sources. No flares, smoking or flames in hazard area. Avoid breathing vapor or mist. Provide adequate ventilation. Wear appropriate respirator when ventilation is inadequate. Put on appropriate personal protective equipment.

For emergency responders : If specialized clothing is required to deal with the spillage, take note of any information in Section 8 on suitable and unsuitable materials. See also the information in "For non-emergency personnel".

Section 6. Accidental release measures

Environmental precautions : Avoid dispersal of spilled material and runoff and contact with soil, waterways, drains and sewers. Inform the relevant authorities if the product has caused environmental pollution (sewers, waterways, soil or air).

Methods and materials for containment and cleaning up

Small spill : Stop leak if without risk. Move containers from spill area. Use spark-proof tools and explosion-proof equipment. Dilute with water and mop up if water-soluble. Alternatively, or if water-insoluble, absorb with an inert dry material and place in an appropriate waste disposal container. Dispose of via a licensed waste disposal contractor.

Large spill : Stop leak if without risk. Move containers from spill area. Use spark-proof tools and explosion-proof equipment. Approach release from upwind. Prevent entry into sewers, water courses, basements or confined areas. Wash spillages into an effluent treatment plant or proceed as follows. Contain and collect spillage with non-combustible, absorbent material e.g. sand, earth, vermiculite or diatomaceous earth and place in container for disposal according to local regulations (see Section 13). Dispose of via a licensed waste disposal contractor. Contaminated absorbent material may pose the same hazard as the spilled product. Note: see Section 1 for emergency contact information and Section 13 for waste disposal.

Section 7. Handling and storage

Precautions for safe handling

Protective measures : Put on appropriate personal protective equipment (see Section 8). Avoid exposure - obtain special instructions before use. Avoid exposure during pregnancy. Do not handle until all safety precautions have been read and understood. Do not get in eyes or on skin or clothing. Do not ingest. Avoid breathing vapor or mist. Use only with adequate ventilation. Wear appropriate respirator when ventilation is inadequate. Do not enter storage areas and confined spaces unless adequately ventilated. Keep in the original container or an approved alternative made from a compatible material, kept tightly closed when not in use. Store and use away from heat, sparks, open flame or any other ignition source. Use explosion-proof electrical (ventilating, lighting and material handling) equipment. Use only non-sparking tools. Take precautionary measures against electrostatic discharges. Empty containers retain product residue and can be hazardous. Do not reuse container.

Special precautions : If this material is part of a multiple component system, read the Safety Data Sheet(s) for the other component or components before blending as the resulting mixture may have the hazards of all of its parts.

Advice on general occupational hygiene : Eating, drinking and smoking should be prohibited in areas where this material is handled, stored and processed. Workers should wash hands and face before eating, drinking and smoking. Remove contaminated clothing and protective equipment before entering eating areas. See also Section 8 for additional information on hygiene measures.

Section 7. Handling and storage

Conditions for safe storage, including any incompatibilities : Do not store below the following temperature: 5°C (41°F). Store in accordance with local regulations. Store in a segregated and approved area. Store in original container protected from direct sunlight in a dry, cool and well-ventilated area, away from incompatible materials (see Section 10) and food and drink. Store locked up. Eliminate all ignition sources. Separate from oxidizing materials. Keep container tightly closed and sealed until ready for use. Containers that have been opened must be carefully resealed and kept upright to prevent leakage. Do not store in unlabeled containers. Use appropriate containment to avoid environmental contamination.

Section 8. Exposure controls/personal protection

Control parameters

Occupational exposure limits

Ingredient name	Exposure limits
4-chloro-α,α,α-trifluorotoluene	**IPEL (PPG).** TWA: 0.57 ppm STEL: 1.71 ppm
Solvent naphtha (petroleum), light aromatic	None.
1,2,4-trimethylbenzene	**CA Alberta Provincial (Canada, 6/2018).** 8 hrs OEL: 123 mg/m³ 8 hours. 8 hrs OEL: 25 ppm 8 hours. **CA British Columbia Provincial (Canada, 10/2019).** TWA: 25 ppm 8 hours. **CA Quebec Provincial (Canada, 7/2019).** TWAEV: 123 mg/m³ 8 hours. TWAEV: 25 ppm 8 hours. **CA Ontario Provincial (Canada, 6/2019).** TWA: 25 ppm 8 hours. **CA Saskatchewan Provincial (Canada, 7/2013).** STEL: 30 ppm 15 minutes. TWA: 25 ppm 8 hours.
toluene	**CA Alberta Provincial (Canada, 6/2018). Absorbed through skin.** 8 hrs OEL: 188 mg/m³ 8 hours. 8 hrs OEL: 50 ppm 8 hours. **CA British Columbia Provincial (Canada, 10/2019).** TWA: 20 ppm 8 hours. **CA Ontario Provincial (Canada, 6/2019).** TWA: 20 ppm 8 hours. **CA Quebec Provincial (Canada, 7/2019). Absorbed through skin.** TWAEV: 188 mg/m³ 8 hours. TWAEV: 50 ppm 8 hours. **CA Saskatchewan Provincial (Canada, 7/2013). Absorbed through skin.** STEL: 60 ppm 15 minutes. TWA: 50 ppm 8 hours.

Consult local authorities for acceptable exposure limits.

Section 8. Exposure controls/personal protection

Recommended monitoring procedures : If this product contains ingredients with exposure limits, personal, workplace atmosphere or biological monitoring may be required to determine the effectiveness of the ventilation or other control measures and/or the necessity to use respiratory protective equipment. Reference should be made to appropriate monitoring standards. Reference to national guidance documents for methods for the determination of hazardous substances will also be required.

Appropriate engineering controls : Use only with adequate ventilation. Use process enclosures, local exhaust ventilation or other engineering controls to keep worker exposure to airborne contaminants below any recommended or statutory limits. The engineering controls also need to keep gas, vapor or dust concentrations below any lower explosive limits. Use explosion-proof ventilation equipment.

Environmental exposure controls : Emissions from ventilation or work process equipment should be checked to ensure they comply with the requirements of environmental protection legislation. In some cases, fume scrubbers, filters or engineering modifications to the process equipment will be necessary to reduce emissions to acceptable levels.

Individual protection measures

Hygiene measures : Wash hands, forearms and face thoroughly after handling chemical products, before eating, smoking and using the lavatory and at the end of the working period. Appropriate techniques should be used to remove potentially contaminated clothing. Wash contaminated clothing before reusing. Ensure that eyewash stations and safety showers are close to the workstation location.

Eye/face protection : Chemical splash goggles.

Skin protection

Hand protection : Chemical-resistant, impervious gloves complying with an approved standard should be worn at all times when handling chemical products if a risk assessment indicates this is necessary. Considering the parameters specified by the glove manufacturer, check during use that the gloves are still retaining their protective properties. It should be noted that the time to breakthrough for any glove material may be different for different glove manufacturers. In the case of mixtures, consisting of several substances, the protection time of the gloves cannot be accurately estimated.

Gloves : For prolonged or repeated handling, use the following type of gloves:

Recommended: nitrile rubber

Body protection : Personal protective equipment for the body should be selected based on the task being performed and the risks involved and should be approved by a specialist before handling this product. When there is a risk of ignition from static electricity, wear anti-static protective clothing. For the greatest protection from static discharges, clothing should include anti-static overalls, boots and gloves.

Other skin protection : Appropriate footwear and any additional skin protection measures should be selected based on the task being performed and the risks involved and should be approved by a specialist before handling this product.

Respiratory protection : Respirator selection must be based on known or anticipated exposure levels, the hazards of the product and the safe working limits of the selected respirator. If workers are exposed to concentrations above the exposure limit, they must use appropriate, certified respirators. Use a properly fitted, air-purifying or air-fed respirator complying with an approved standard if a risk assessment indicates this is necessary.

Section 9. Physical and chemical properties

Appearance

Physical state	: Liquid.
Color	: White.
Odor	: Not available.
Odor threshold	: Not available.
pH	: Not available.
Melting point	: Not available.
Boiling point	: >37.78°C (>100°F)
Flash point	: Closed cup: -20°C (-4°F)
Auto-ignition temperature	: Not available.
Decomposition temperature	: Not available.
Flammability (solid, gas)	: Not available.
Lower and upper explosive (flammable) limits	: Not available.
Evaporation rate	: Not available.
Vapor pressure	: Not available.
Vapor density	: Not available.
Relative density	: 1.27
Density (lbs / gal)	: 10.6
Solubility	: Partially soluble in the following materials: cold water.
Partition coefficient: n-octanol/water	: Not available.
Viscosity	: Kinematic (40°C (104°F)): >0.21 cm^2/s (>21 cSt)
Volatility	: 93% (v/v), 94.561% (w/w)
% Solid. (w/w)	: 5.439

Section 10. Stability and reactivity

Reactivity	: No specific test data related to reactivity available for this product or its ingredients.
Chemical stability	: The product is stable.
Possibility of hazardous reactions	: Under normal conditions of storage and use, hazardous reactions will not occur.
Conditions to avoid	: When exposed to high temperatures may produce hazardous decomposition products. Refer to protective measures listed in sections 7 and 8.
Incompatible materials	: Keep away from the following materials to prevent strong exothermic reactions: oxidizing agents, strong alkalis, strong acids.
Hazardous decomposition products	: Depending on conditions, decomposition products may include the following materials: carbon oxides halogenated compounds carbonyl halides

Section 11. Toxicological information

Information on toxicological effects

Acute toxicity

Product/ingredient name	Result	Species	Dose	Exposure
4-chloro-α,α,α-trifluorotoluene	LC50 Inhalation Vapor	Rat	33080 mg/m³	4 hours
	LD50 Dermal	Rabbit	>2.7 g/kg	-
	LD50 Oral	Rat	13 g/kg	-
Solvent naphtha (petroleum), light aromatic	LD50 Dermal	Rabbit	3.48 g/kg	-
	LD50 Oral	Rat	8400 mg/kg	-
1,2,4-trimethylbenzene	LC50 Inhalation Vapor	Rat	18000 mg/m³	4 hours
	LD50 Oral	Rat	5 g/kg	-
toluene	LC50 Inhalation Vapor	Rat	49 g/m³	4 hours
	LD50 Dermal	Rabbit	8.39 g/kg	-
	LD50 Oral	Rat	5580 mg/kg	-

Conclusion/Summary : There are no data available on the mixture itself.

Irritation/Corrosion

Conclusion/Summary

Skin : There are no data available on the mixture itself.
Eyes : There are no data available on the mixture itself.
Respiratory : There are no data available on the mixture itself.

Sensitization

Skin : There are no data available on the mixture itself.
Respiratory : There are no data available on the mixture itself.

Mutagenicity

Conclusion/Summary : There are no data available on the mixture itself.

Carcinogenicity

Conclusion/Summary : There are no data available on the mixture itself.

Classification

Product/ingredient name	OSHA	IARC	NTP
4-chloro-α,α,α-trifluorotoluene	-	2B	-
toluene	-	3	-

Carcinogen Classification code:

IARC: 1, 2A, 2B, 3, 4
NTP: Known to be a human carcinogen; Reasonably anticipated to be a human carcinogen
OSHA: +
Not listed/not regulated: -

Reproductive toxicity

Conclusion/Summary : There are no data available on the mixture itself.

Teratogenicity

Conclusion/Summary : There are no data available on the mixture itself.

Specific target organ toxicity (single exposure)

Section 11. Toxicological information

Name	Category	Route of exposure	Target organs
4-chloro-α,α,α-trifluorotoluene	Category 3	-	Respiratory tract irritation
Solvent naphtha (petroleum), light aromatic	Category 3	-	Respiratory tract irritation
	Category 3		Narcotic effects
1,2,4-trimethylbenzene	Category 3	-	Respiratory tract irritation
toluene	Category 3	-	Narcotic effects

Specific target organ toxicity (repeated exposure)

Name	Category	Route of exposure	Target organs
toluene	Category 2	-	-

Target organs : Contains material which causes damage to the following organs: brain, central nervous system (CNS).
Contains material which may cause damage to the following organs: blood, lungs, liver, upper respiratory tract, skin, eyes, adrenal.

Aspiration hazard

Name	Result
Solvent naphtha (petroleum), light aromatic	ASPIRATION HAZARD - Category 1
toluene	ASPIRATION HAZARD - Category 1

Information on the likely routes of exposure

Potential acute health effects

Eye contact : Causes serious eye irritation.

Inhalation : May cause respiratory irritation.

Skin contact : Causes skin irritation. Defatting to the skin.

Ingestion : No known significant effects or critical hazards.

Over-exposure signs/symptoms

Eye contact : Adverse symptoms may include the following:
pain or irritation
watering
redness

Inhalation : Adverse symptoms may include the following:
respiratory tract irritation
coughing
reduced fetal weight
increase in fetal deaths
skeletal malformations

Section 11. Toxicological information

Skin contact : Adverse symptoms may include the following:
irritation
redness
dryness
cracking
reduced fetal weight
increase in fetal deaths
skeletal malformations

Ingestion : Adverse symptoms may include the following:
reduced fetal weight
increase in fetal deaths
skeletal malformations

Delayed and immediate effects and also chronic effects from short and long term exposure

Conclusion/Summary : There are no data available on the mixture itself. Exposure to component solvent vapor concentrations in excess of the stated occupational exposure limit may result in adverse health effects such as mucous membrane and respiratory system irritation and adverse effects on the kidneys, liver and central nervous system. Symptoms and signs include headache, dizziness, fatigue, muscular weakness, drowsiness and, in extreme cases, loss of consciousness. Solvents may cause some of the above effects by absorption through the skin. There is some evidence that repeated exposure to organic solvent vapors in combination with constant loud noise can cause greater hearing loss than expected from exposure to noise alone. If splashed in the eyes, the liquid may cause irritation and reversible damage. Ingestion may cause nausea, diarrhea and vomiting. This takes into account, where known, delayed and immediate effects and also chronic effects of components from short-term and long-term exposure by oral, inhalation and dermal routes of exposure and eye contact.

Short term exposure

Potential immediate effects : There are no data available on the mixture itself.

Potential delayed effects : There are no data available on the mixture itself.

Long term exposure

Potential immediate effects : There are no data available on the mixture itself.

Potential delayed effects : There are no data available on the mixture itself.

Potential chronic health effects

General : Prolonged or repeated contact can defat the skin and lead to irritation, cracking and/or dermatitis.

Carcinogenicity : Suspected of causing cancer. Risk of cancer depends on duration and level of exposure.

Mutagenicity : No known significant effects or critical hazards.

Reproductive toxicity : Suspected of damaging fertility or the unborn child.

Numerical measures of toxicity

Acute toxicity estimates

Section 11. Toxicological information

Product/ingredient name	Oral (mg/kg)	Dermal (mg/kg)	Inhalation (gases) (ppm)	Inhalation (vapors) (mg/l)	Inhalation (dusts and mists) (mg/l)
1K COMPLIANT ADHESION PROMOTER	302245.4	2800.1	N/A	1088.1	90.7
4-chloro-α,α,α-trifluorotoluene	13000	2500	N/A	33.08	N/A
Solvent naphtha (petroleum), light aromatic	8400	3480	N/A	N/A	N/A
1,2,4-trimethylbenzene	5000	N/A	N/A	18	1.5
toluene	5580	8390	N/A	49	N/A

Section 12. Ecological information

Toxicity

Product/ingredient name	Result	Species	Exposure
Solvent naphtha (petroleum), light aromatic	Acute LC50 8.2 mg/l	Fish	96 hours

Persistence and degradability

Product/ingredient name	Aquatic half-life	Photolysis	Biodegradability
toluene	-	-	Readily

Bioaccumulative potential

Product/ingredient name	$LogP_{ow}$	BCF	Potential
1,2,4-trimethylbenzene	3.63	120.23	low
toluene	2.73	8.32	low

Mobility in soil

Soil/water partition coefficient (K_{OC}) : Not available.

Section 13. Disposal considerations

Disposal methods : The generation of waste should be avoided or minimized wherever possible. Disposal of this product, solutions and any by-products should at all times comply with the requirements of environmental protection and waste disposal legislation and any regional local authority requirements. Dispose of surplus and non-recyclable products via a licensed waste disposal contractor. Waste should not be disposed of untreated to the sewer unless fully compliant with the requirements of all authorities with jurisdiction. Waste packaging should be recycled. Incineration or landfill should only be considered when recycling is not feasible. This material and its container must be disposed of in a safe way. Care should be taken when handling emptied containers that have not been cleaned or rinsed out. Empty containers or liners may retain some product residues. Vapor from product residues may create a highly flammable or explosive atmosphere inside the container. Do not cut, weld or grind used containers unless they have been cleaned thoroughly internally. Avoid dispersal of spilled material and runoff and contact with soil, waterways, drains and sewers.

Disposal should be in accordance with applicable regional, national and local laws and regulations.

Section 13. Disposal considerations

Refer to Section 7: HANDLING AND STORAGE and Section 8: EXPOSURE CONTROLS/PERSONAL PROTECTION for additional handling information and protection of employees. Section 6. Accidental release measures

Section 14. Transport information

	TDG	IMDG	IATA
UN number	UN1263	UN1263	UN1263
UN proper shipping name	PAINT	PAINT	PAINT
Transport hazard class (es)	3	3	3
Packing group	II	II	II
Environmental hazards	No.	No.	No.
Marine pollutant substances	Not applicable.	Not applicable.	Not applicable.

Additional information

TDG : None identified.
IMDG : None identified.
IATA : None identified.

Special precautions for user : **Transport within user's premises:** always transport in closed containers that are upright and secure. Ensure that persons transporting the product know what to do in the event of an accident or spillage.

Transport in bulk according to IMO instruments : Not applicable.

Proof of classification statement : Product classified as per the following sections of the Transportation of Dangerous Goods Regulations: 2.18-2.19 (Class 3).

Section 15. Regulatory information

National Inventory List

Canada inventory (DSL) : All components are listed or exempted.

Section 16. Other information

Hazardous Material Information System (U.S.A.)

Health : 2 * **Flammability** : 3 **Physical hazards** : 0
(*) - Chronic effects

Caution: HMIS® ratings are based on a 0-4 rating scale, with 0 representing minimal hazards or risks, and 4 representing significant hazards or risks. Although HMIS® ratings and the associated label are not required on MSDSs or products leaving a facility under 29 CFR 1910.1200, the preparer may choose to provide them. HMIS® ratings are to be used with a fully implemented HMIS® program. HMIS® is a registered trademark and service mark of the American Coatings Association, Inc.

The customer is responsible for determining the PPE code for this material. For more information on HMIS® Personal Protective Equipment (PPE) codes, consult the HMIS® Implementation Manual.

Section 16. Other information

National Fire Protection Association (U.S.A.)

Health : 2 **Flammability** : 3 **Instability** : 0

Date of issue/Date of revision **7 January 2021**

Organization that prepared the MSDS : EHS

Key to abbreviations : ATE = Acute Toxicity Estimate
BCF = Bioconcentration Factor
GHS = Globally Harmonized System of Classification and Labelling of Chemicals
IATA = International Air Transport Association
IBC = Intermediate Bulk Container
IMDG = International Maritime Dangerous Goods
LogPow = logarithm of the octanol/water partition coefficient
MARPOL = International Convention for the Prevention of Pollution From Ships, 1973 as modified by the Protocol of 1978. ("Marpol" = marine pollution)
N/A = Not available
SGG = Segregation Group
UN = United Nations

◤ **Indicates information that has changed from previously issued version.**

Disclaimer

The information contained in this data sheet is based on present scientific and technical knowledge. The purpose of this information is to draw attention to the health and safety aspects concerning the products supplied by PPG, and to recommend precautionary measures for the storage and handling of the products. No warranty or guarantee is given in respect of the properties of the products. No liability can be accepted for any failure to observe the precautionary measures described in this data sheet or for any misuse of the products.

List of perimits

* operating permit APC-2013/0027-
construction/operation
* Exempt From 40 CFR Part 63, subpart HHHHHH

Height of Roof where
Paint booth will be located
$13' \frac{1}{2}'$